AGENDA
TECHNICAL REVIEW COMMITTEE
REGULAR MEETING
FEBRUARY 27, 2020
9:00 AM
CITY HALL COMMISSION CHAMBERS
204 ASH STREET
FERNANDINA BEACH, FL 32034

1. CALL TO ORDER

2. ROLL CALL

3. PLEDGE OF ALLEGIANCE

4. APPROVAL OF MINUTES

4.1 February 13, 2020 Regular Meeting

5. DISCUSSION ITEMS

5.1 Change of Use at 850 Indigo Street - Tara Thousand & Xuemei Chen will be present to discuss converting the office space into a massage business.

5.2 Roberto and Marina Pestana, owners of Espana Restaurant at 22 S. 4th Street will be present to discuss expanding their outdoor seating capacity.

6. DEVELOPMENT INQUIRIES FROM APPLICANTS NOT ON THE AGENDA - DISCUSSION ONLY, NO ACTION TO BE TAKEN.

7. COMMITTEE BUSINESS

7.1 SPR 2019-05 Clay Lee_Jamestown Road Hangars

8. ADJOURNMENT

NEXT REGULAR TRC MEETING IS SCHEDULED FOR MARCH 12TH 2020

Persons with disabilities requiring accommodations in order to participate in this program or activity should contact 310-3115, TTY 711, or through the Florida Relay Services at 1-800-955-8771 (TTY number for all City offices) at least 24 hours in advance to request such accommodations.

DRAFT

MINUTES
TECHNICAL REVIEW COMMITTEE
REGULAR MEETING
FEBRUARY 13, 2020

1. CALL TO ORDER – 9:02am

2. ROLL CALL

MEMBERS PRESENT:

Jacob Platt, Planning
Rex Lester, Streets (arrived at 9:04am)
Michelle Forstrom, Code
Juan Brown, Utilities (arrived at 9:09am)
Don Kukla, Building
Jason Higginbotham, Fire
Sal Cumella, Historic Preservation
Andre Desilet, Stormwater

3. APPROVAL OF MINUTES

3.1 **January 23, 2020 Regular Meeting**

ACTION TAKEN: A motion was made by Member Forstrom, seconded by Member Desilet, to approve the minutes as presented.

Motion passed by unanimous voice vote.

4. DISCUSSION ITEMS

4.1 **Park Avenue & Hometown Street Median & Marquees: George Haffey with the Amelia Park Traffic and Parking Committee – proposal to construct median strips and marquess with the right of way on Park and Hometown entrances.**

George Haffey, 1640 Northpark Dr, was present to discuss the proposed median strips and marquess. The proposed loss of parking spaces was discussed in length. The applicant was advised to return with full engineering.

4.2 **520 Centre Street – Joel Reitzer, R4 Development: Peppers Parking lot redesign**

Joel Reitzer was present to discuss the relocations of a dumpster and enclosure to accommodate neighbors' concerns. The applicant was advised to add ADA parking detail to the construction drawings and move forward with HDC and permitting.

4.3 **Pre-Application Discussion: 101 N. 2nd Street Asa Gillette, Gillette & Associates, and Walt Green, Harrison Design to discuss plans for the Standard Marine block.**

Asa Gillette, Walt Green, and Bill Harrison were present to discuss the rehabilitation of the Standard Marine building and restoring the underlying lots of record to accommodate fee simple townhomes.

4.4 **Change of Use: 1401 Atlantic Avenue Asa Gillette, Gillette & Associates to discuss plans for an existing photography studio/residence.**

This item was withdrawn.

DRAFT

5. DEVELOPMENT INQUIRIES FROM APPLICANTS NOT ON THE AGENDA- DISCUSSION ONLY, NO ACTION TO BE TAKEN.

The new owners of 219 S 8th Street were present to discuss a change of use from retail to real estate office and the future expansion of the outbuilding from workshop to office space.
The applicant was advised to work with a design professional and return to TRC.

Nick Gillette was present to discuss 10 proposed duplex units at 400 S 8th Street (Taylor Rental).

6. COMMITTEE BUSINESS

6.1 SPR 2019-03: Simmons Road Park – Sign off
6.2 SPR 2019-10: SouthShore CRE Hangar – Sign off

7. ADJOURNMENT – 11:00am

_____
Jacob Platt

PERMIT SET
NOT FOR CONSTRUCTION

Engineering Plans

For

PRIVATE COMMERCIAL HANGAR

For

CLAY LEE

Gillette & Associates, Inc.

Civil & Environmental Engineering
Mechanical & Structural Engineering
Permitting & Construction Management

20 South 4th Street Amelia Island, Florida 32034
Phone: 904/261-8819

PERMITTING AGENCIES

CITY OF FERNANDINA BEACH: 904-310-3421
SJRWMD: 904-730-6270

UTILITY PROVIDERS

WATER/SEWER: CITY OF FERNANDINA BEACH
ELECTRIC: FLORIDA PUBLIC UTILITIES
CABLE: COMCAST
TELEPHONE: AT&T

G&A Project
No.:19-10-31

ISSUE DATE: September 12, 2019

REVISION DATE: January 6, 2020

N

SITE LOCATION MAP

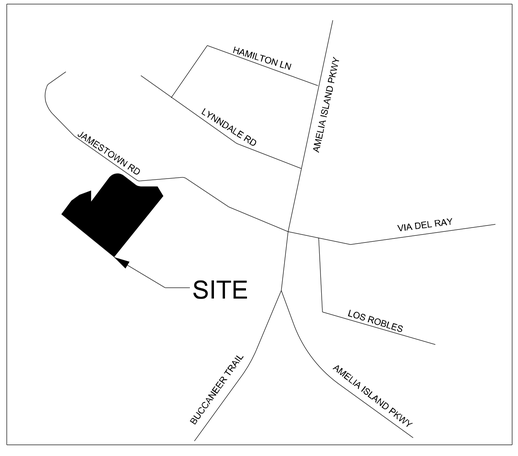

PRIVATE COMMERCIAL HANGAR
For
CLAY LEE

RELEASED FOR CONSTRUCTION _____ BY _____

$$time$$ $$date$$ $$filename$$

GENERAL NOTES

SITE / GEOMETRY

1.ALL WORK SHALL BE PERFORMED IN A SAFE MANNER.ALL SAFETY RULES AND GUIDELINES OF O.S.H.A.SHALL BE FOLLOWED.THE CONTRACTOR SHALL BE WHOLLY RESPONSIBLE FOR ANY INJURIES OF HIS EMPLOYEES.AND ANY DAMAGE TO PRIVATE PROPERTY OR PERSONS DURING THE COURSE OF THIS PROJECT.ALL COSTS ASSOCIATED WITH COMPLYING WITH O.S.H.A.REGULATIONS AND THE FLORIDA TRENCH SAFETY ACT MUST BE INCLUDED IN THE CONTRACTOR'S PRICE FOR PERFORMING THE WORK.

2.THE CONTRACTOR SHALL BE RESPONSIBLE FOR VISITING THE JOB SITE PRIOR TO PREPARING THE BID FOR THE PURPOSE OF FAMILIARIZING HIMSELF WITH THE NATURE AND THE EXTENT OF THE WORK AND LOCAL CONDITIONS.EITHER SURFACE OR SUBSURFACE.WHICH MAY AFFECT THE WORK TO BE PERFORMED.AND THE EQUIPMENT.LABOR AND MATERIALS REQUIRED. FAILURE TO DO SO WILL NOT RELIEVE THE CONTRACTOR OF COMPLETE PERFORMANCE UNDER THIS CONTRACT.THE CONTRACTOR IS URGED TO TAKE COLOR PHOTOGRAPHS ALONG THE ROUTE OF THIS PROJECT TO RECORD EXISTING CONDITIONS PRIOR TO CONSTRUCTION.AND TO AID IN RESOLVING POSSIBLE FUTURE COMPLAINTS THAT MAY OCCUR DUE TO CONSTRUCTION OF THE PROJECT.ALL COSTS ASSOCIATED WITH PRELIMINARY INVESTIGATION SHALL BE THE RESPONSIBILITY OF THE CONTRACTOR.

3.ALL IMPROVEMENTS SHOWN ARE TO BE WARRANTED BY THE CONTRACTOR TO THE DEVELOPER.

4.ELEVATIONS ARE BASED ON NORTH AMERICAN VERTICAL DATUM OF 1988.

5.TOPOGRAPHIC AND BOUNDARY INFORMATION WAS PROVIDED BY:CODY'S PROFESSIONAL SURVEYING & MAPPING.INC (904-696-8840)

6.THE CONTRACTOR SHALL BE RESPONSIBLE FOR OBTAINING ALL NECESSARY BUILDING.RIGHT-OF-WAY PERMITS NOT PROVIDED AND INSURANCE REQUIRED FOR THE PROJECT.

7.THE CONTRACTOR SHALL COORDINATE THE WORK WITHIN COUNTY OR STATE RIGHT-OF-WAY WITH THE PROPER AGENCIES FOR MAINTENANCE OF TRAFFIC AND METHOD OF CONSTRUCTION & REPAIR.

8.THE CONTRACTOR SHALL ADVISE THE OWNER'S AUTHORIZED REPRESENTATIVE OF PLANNED WORK SCEDULE.THE CONTRACTOR SHALL COORDINATE THEIR CONSTRUCTION WITH ALL OTHER CONTRACTORS.IN THE EVENT OF ANY CONFLICT WHATSOEVER,THE CONTRACTOR SHALL NOTIFY THE ENGINEER OF RECORD.AND THE OWNER PRIOR TO PROCEEDING WITH CONSTRUCTION.

9."AS-BUILT" DRAWINGS - AS-BUILTS ARE REQUIRED TO BE SIGNED AND SEALED BY A FLORIDA REGISTERED LAND SURVEYOR. THEREFORE.IT SHALL BE THE CONTRACTOR'S RESPONSIBILITY TO CONTRACT WITH A LAND SURVEYOR REGISTERED IN THE STATE OF FLORIDA FOR THE PREPARATION.FIELD LOCATIONS.CERTIFICATION.AND SUBMITTAL OF AS-BUILT DRAWINGS.

10."AS-BUILT" RECORD DATA AND INFORMATION SHALL BE MAINTAINED BY THE CONTRACTOR.RECORD DRAWINGS SHALL BE SUPPLIED TO THE ENGINEER.

11.THE CONTRACTOR IS RESPONSIBLE FOR PROTECTION OF ALL SURVEY AND PROPERTY MONUMENTS.IF A MONUMENT IS DISTURBED.THE CONTRACTOR SHALL CONTRACT WITH THE SURVEYOR OF RECORD FOR REINSTALLATION OF THE MONUMENT.

12.ALL DEBRIS RESULTING FROM ALL ACTIVITIES SHALL BE DISPOSED OF OFF-SITE BY CONTRACTOR ON A DAILY BASIS.

13.ALL EXCESS SUITABLE AND UNSUITABLE MATERIALS SHALL BE REMOVED FROM THE SITE BY THE CONTRACTOR UNLESS DIRECTED OTHERWISE BY THE ENGINEER.

14.ALL EXISTING TREES LISTED TO REMAIN SHALL BE PRESERVED AND PROTECTED.

15.THE LOCATION OF ALL EXISTING UTILITIES,STRUCTURES,AND IMPROVEMENTS ON THE DRAWINGS ARE BASED ON LIMITED INFORMATION AND MAY NOT HAVE BEEN FIELD VERIFIED.THE LOCATIONS ARE APPROXIMATE.THE CONTRACTOR SHALL NOTIFY RESPECTIVE UTILITY OWNERS AND FIELD VERIFY LOCATIONS OF EXISTING UTILITIES AND OTHER IMPROVEMENTS PRIOR TO COMMENCING ANY CONSTRUCTION.IF THE LOCATIONS SHOWN ARE CONTRARY TO ACTUAL FIELD LOCATIONS.THE CONTRACTOR SHALL NOTIFY THE OWNER AND ENGINEER OF THE DISCREPANCY.THE DISCREPANCY SHOULD BE RESOLVED PRIOR TO COMMENCING CONSTRUCTION.THE CONTRACTOR SHALL EXERCISE EXTREME CAUTION WHEN WORKING IN AREAS NEAR EXISTING UTILITY IMPROVEMENTS AND SHALL BE RESPONSIBLE FOR REPAIRS OR PAYMENTS FOR ALL DAMAGE MADE TO EXISTING UTILITIES OR OTHER IMPROVEMENTS.PRIOR TO COMMENCEMENT OF ANY CONSTRUCTION,THE CONTRACTOR SHALL VERIFY ALL GRADES, INVERTS.AND TYPE OF MATERIAL OF EXISTING UTILITIES TO WHICH THEY SHALL CONNECT.

16.THE CONTRACTOR SHALL SUBMIT SHOP DRAWINGS TO THE ENGINEER ON ALL MATERIALS.FOR REVIEW AND APPROVAL.PRIOR TO PURCHASE OR CONSTRUCTION OF ANY UTILITY OR STRUCTURE.

17.UNSUITABLE MATERIALS UNDER WATER,SEWER,OR STORM PIPE AND/OR STRUCTURES SHALL BE REMOVED AND REPLACED WITH SELECTED BACKFILL COMPACTED TO 98% OF IT'S MAXIMUM DENSITY AS DETERMINED BY THE MODIFIED PROCTOR TEST (ASTM D1557).

18.ALL WATER & SEWER CONSTRUCTION SHALL BE ACCOMPLISHED BY AN UNDERGROUND UTILITY CONTRACTOR LICENSED UNDER THE PROVISIONS OF CHAPTER 489 FLORIDA STATUTES.

19.WHEN DEWATERING CAPACITY REQUIRES A PERMIT (CUP),IT SHALL BE THE CONTRACTOR'S RESPONSIBILITY TO OBTAIN THE PERMIT THROUGH THE ST.JOHNS RIVER WATER MANAGEMENT DISTRICT.

20.WATER MAINS SHALL BE LAID AT LEAST 10 FEET HORIZONTALLY FROM ANY EXISTING OR PROPOSED SANITARY HAZARD.THE DISTANCE SHALL BE MEASURED EDGE TO EDGE.WHERE PARALLEL WATER AND SEWER MAINS HAVE LESS THAN 10 FOOT HORIZONTAL SEPARATION,20 FOOT LENGTHS OF C900 (DRIB) WATER QUALITY PIPE SHALL BE USED WITH THE JOINTS STAGGERED AT 10 FOOT INTERVALS.THE PIPES SHALL BE PLACED IN SEPARATE TRENCHES WITH THE WATER MAIN AT LEAST 18 INCHES ABOVE THE SEWER.

21.WATER MAINS CROSSING SANITARY HAZARDS SHALL BE LAID TO PROVIDE A MINIMUM VERTICAL DISTANCE OF 18 INCHES BETWEEN THE OUTSIDE OF THE WATER MAIN AND THE OUTSIDE OF THE SEWER MAIN.WHERE WATER AND SEWER MAINS CROSS WITH BETWEEN 18 INCHES AND 6 INCHES OF VERTICAL CLEARANCE,A 20 FOOT SECTION OF C900 (DRIB) WATER QUALITY PIPE SHALL BE CENTERED ON THE POINT OF THE CROSSING.THE CONTRACTOR SHALL FIELD VERIFY THE VERTICAL SEPARATION.THE MINIMUM SEPARATION BETWEEN WATER AND SEWER PIPES IS TO BE 6 INCHES OUTSIDE DIAMETER TO OUTSIDE DIAMETER.

22.NO WATER MAIN PIPE SHALL PASS THROUGH OR COME IN CONTACT WITH ANY PART OF A SEWER MANHOLE.

23.BLANK

24.TRACER WIRE SHALL BE PROVIDED ON ALL WATER MAINS AND FORCE MAINS.TRACER WIRE SHALL BE A MINIMUM OF 14 GUAGE SOLID COPPER WIRE.COATED.AND SUITABLE FOR BURIAL.WIRE SHALL BE ATTACHED DIRECTLY TO TOP OF PIPE AND BROUGHT INTO EACH VALVE BOX AND COILED TO ALLOW FOR EASY ACCESS AND EXTENSION ABOVE FINISHED GRADE FOR ATTACHMENT OF LOCATING EQUIPMENT.

25.ALL PIPE LENGTHS ARE APPROXIMATE DIMENSIONS,ALL DRAINAGE STRUCTURES SHALL BE CONSTRUCTED TO CONFORM WITH TYPICAL SECTIONS AND DETAILS AS SHOWN ON THE MISCELLANEOUS DETAILS SHEET AND IN ACCORDANCE WITH THE SPECIFICATIONS.

26.ALL UNDERGROUND UTILITIES MUST BE INSTALLED PRIOR TO PREPARATION OF SUBGRADE FOR PAVEMENT.

27.GRADES SHOWN ON PLANS ARE EDGE OF PAVEMENT FINISHED GRADES UNLESS OTHERWISE NOTED.

28.SHOULD THE SURFACE OR SUBSURFACE CONDITIONS VARY FROM WHAT IS SHOWN ON THE PLANS,THE CONTRACTOR SHALL IMMEDIATELY NOTIFY THE ENGINEER.

29. ALL AREAS DISTURBED DURING CONSTRUCTION SHALL BE SEEDED AND MULCHED UNLESS OTHERWISE SPECIFICALLY STATED.

30.THE CONTRACTOR IS RESPONSIBLE FOR THE CONTROL OF SEDIMENT-LADEN RUNOFF RESULTING FROM STORM EVENTS DURING THE CONSTRUCTION PHASE.EROSION CONTROL FACILITIES SHOULD BE INSTALLED EARLY DURING THE CONSTRUCTION PERIOD SO AS TO PREVENT THE TRANSPORT OF SEDIMENT INTO SURFACE WATERS.RE-VEGETATION AND STABILIZATION OF DISTURBED AREAS SHOULD BE ACCOMPLISHED IMMEDIATELY TO REDUCE THE POTENTIAL FOR FURTHER SOIL EROSION.

31. ANY DISCREPANCIES ON THE DRAWINGS SHALL BE BROUGHT TO THE ATTENTION OF THE ENGINEER AND THE CITY OF FERNANDINA BEACH BEFORE COMMENCING WORK.

32.MINIMUM COVER OVER PIPES SHALL BE 36" UNLESS OTHERWISE INDICATED.

33.ALL UNDERGROUND UTILITY COMPANIES SHALL BE CONTACTED AT LEAST 48 HOURS PRIOR TO COMMENCING CONSTRUCTION.

34.IN ADDITION TO THE SPECIFICATIONS AND DETAILS PROVIDED FOR THIS CONTRACT,THE CITY OF FERNANDINA BEACH STANDARD DETAILS AND SPECIFICATIONS (LATEST REVISION) SHALL ALSO BE USED FOR ANY ITEMS NOT COVERED.IT SHALL BE THE CONTRACTOR'S RESPONSIBILITY TO OBTAIN A SET OF STANDARD DETAILS AND SPECIFICATIONS FROM THE CITY OF FERNANDINA BEACH.

35.BACKFILL MATERIAL SHALL BE COMPACTED TO 100% (-2%) PER CITY OF FERNANDINA BEACH REQUIREMENTS UNDER EXISTING AND PROPOSED ROADWAYS.

36.NO FIELD CHANGES OR DEVIATIONS FROM DESIGN TO BE MADE WITHOUT PRIOR APPROVAL OF THE ENGINEER.

37.STATIONING REFERS TO THE CENTERLINE OF THE ROADWAY EXCEPT AS NOTED ON PLANS.WHERE PAVEMENT SPLITS, THE STATIONING FOLLOWS THE INSIDE EDGE OF PAVEMENT UNTIL ROADWAY TRANSITIONS BACK TO THE TYPICAL ROADWAY SECTION

38.ALL CONSTRUCTION,MATERIAL,AND WORKMANSHIP ARE TO BE IN ACCORDANCE WITH THE CITY OF FERNANDINA BEACH STANDARDS.

WATER NOTES

1.WATER MAINS SHALL HAVE A MINIMUM OF 42" COVER UNDER PAVEMENT OR 36" COVER FROM FINISHED GRADE UNLESS OTHERWISE SHOWN.ALL WATER MAINS SHALL BE FLUSHED IN ACCORDANCE WITH.AND UNDER THE DIRECTION OF THE UTILITY COMPANY.

2.THRUST RESTRAINTS ARE REQUIRED IN ACCORDANCE WITH UTHE UTILITY COMPANY STANDARDS WHERE WATER MAINS ARE TERMINATED AND AT ALL BENDS AND TEES.

3.TIE RODS SHALL BE INSTALLED ON ALL VALVES LOCATED AT FITTINGS.ALL 10" AND LARGER VALVES AND LARGER SHALL REQUIRE (4) TIE RODS. MEGA LUG JOINT RESTRAINTS MAY BE USED IN LIEU OF THRUST BLOCKS OR TIE RODS.

4.UNLESS OTHERWISE NOTED.WATER MAINS ARE TO BE PVC DRIB,DR-25,C-900 (BLUE),CLASS 150.

5.ALL WATER MAINS SHALL BE BACTERIOLOGICAL AND PRESSURE TESTED IN ACCORDANCE WITH AWWA C-600.NO CONNECTION TO EXISTING POTABLE WATER SYSTEM SHALL BE ALLOWED UNTIL ALL PROPOSED WATER MAINS HAVE BEEN PRESSURE TESTED. DISINFECTED.AND CLEARED FOR SERVICE.THE UTILITY COMPANY'S AUTHORIZED REPRESENTATIVE MUST BE NOTIFIED 48 HOURS PRIOR TO PERFORMING THE PRESSURE TEST AND MUST BE PRESENT.

6.THE CONTRACTOR SHALL AVOID SERVICE INTERRUPTIONS AND MAINTAIN ANY EXISTING WATER SERVICE TO MEET THE SYSTEM DEMANDS AT ALL TIMES.THE CONTRACTOR SHALL BE RESPONSIBLE FOR NOTIFICATION OF AFFECTED CUSTOMERS OF THE UTILITY A MINIMUM OF 48 HOURS IN ADVANCE OF ANY INTERRUPTION OF SERVICE.BOIL WATER NOTICES SHALL BE DELIVERED IN ACCORDANCE WITH THE UTLITY COMPANY BOIL WATER NOTICE REQUIREMENTS.

7.ALL MAIN FLUSHING POINTS SHALL BE SAME SIZE AS MAIN UP TO 8 INCH WATER MAINS.FLUSHING POINTS FOR MAINS LARGER THAN 8 INCH SHALL BE REDUCED TO 8 INCH.

8.ALL WATER MAINS SHALL BE DISINFECTED USING LIQUID CHLORINE OR HYPOCHLORITES IN ACCORDANCE TO AWWA C651-86. WATER IN MAIN SHALL MAINTAIN A CHLORINE RESIDUAL OF 50 MG/L FOR A MINIMUM OF 24 HOURS.WATER MAIN SHALL NOT BE PLACED IN SERVICE UNTIL CLEARANCE HAS BEEN PROVIDED BY THE APPROPRIATE REGULATING AGENCY AND UNITED WATER FLORIDA.

9.IF SOLVENT CONTAMINATION IS FOUND IN THE PIPE TRENCH.WORK SHALL BE STOPPED AND THE PROPER AUTHORITIES NOTIFIED.BASED ON APPROVAL OF THE PERMITTING AGENCY.DUCTILE IRON PIPE.FITTINGS.AND SOLVENT RESISTANT GASKET MATERIAL SUCH AS FLUOROCARBON SHALL BE USED IN THE CONTAMINATED AREA.THE DUCTILE IRON PIPE SHALL EXTEND AT LEAST 100 FEET BEYOND ANY SOLVENT NOTED.ANY CONTAMINATED SOIL THAT IS EXCAVATED SHALL BE PLACED ON AN IMPERMEABLE MAT AND COVERED WITH A WATER PROOF COVERING.THE PROPER AUTHORITIES WILL BE NOTIFIED AND THE CONTAMINATED SOIL HELD FOR PROPER DISPOSAL.

10.2" FLUSHING HYDRANTS SHALL BE INSTALLED AT ALL DEAD END LINES AND MAIN LINE STUB-OUTS.

11.A SEPARATE WATER SERVICE SHALL BE REQUIRED FOR EACH UNIT SERVED AND SHALL BE INSTALLED 3 FEET EITHER SIDE OF PROPERTY LINE.ALL WATER SERVICES SHALL BE MARKED WITH A "W" ETCHED ON THE CURB.ALL VALVES SHALL BE MARKED WITH A "V" ETCHED ON THE CURB.

12.ALL BACKFLOW PREVENTION ASSEMBLIES SHALL BE INSTALLED IN ACCORDANCE WITH THE UTILITY COMPANY'S STANDARDS.

13.ALL BACKFLOW PREVENTION ASSEMBLIES SHALL BE INSTALLED AT THE CONSUMER'S METER OR AT THE PROPERTY LINE WHEN A METER IS NOT USED.

14.BACKFLOW PREVENTION ASSEMBLIES SHALL BE TESTED BY A STATE OF FLORIDA LICENSED BACKFLOW TECHNICIAN.TEST RESULTS SHALL BE SUBMITTED TO AND APPROVED BY THE UTILITY COMPANY PRIOR TO ACCEPTANCE OF INSTALLATION.

15.MAXIMUM DEPTH ON WATER SERVICES TO METER TO BE 36'.

INDEX

SHEET	DESCRIPTION
	ALL PERMITTING AGENCIES
1	COVER SHEET
2	INDEX SHEET
3	PREDEVELOPMENT DRAINAGE PLAN
4	GEOMETRY PLAN
5	POST DEVELOPMENT DRAINAGE PLAN
6	UTILITY PLAN
7-8	LANDSCAPE PLAN
9	MISCELLANEOUS DETAILS
10-12	WATER DETAILS

FIRE NOTES

1.WHERE UNDERGROUND WATER MAINS AND HYDRANTS ARE TO BE PROVIDED, THEY SHALL BE INSTALLED,COMPLETED,AND IN SERVICE PRIOR TO COMMENCING CONSTRUCTION WORK ON ANY STRUCTURE.(NFPA 1,16.4.3.1.3,2009 EDITION)

2.CLEARANCES OF SEVEN AND ONE HALF FEET (7 FT-6 IN.) IN FRONT OF AND TO THE SIDES OF THE FIRE HYDRANT,WITH A FOUR FOOT CLEARANCE TO THE REAR OF THE HYDRANT.(NFPA 1,18.3.4J,2009)

3.NEW FIRE HYDRANT(S) SHALL BE INSTALLED SO THAT POSITIONED NOT MORE THAN 7 FEET 6 INCHES AWAY FROM CURB OR BERM OF THE ROADWAY.

SEWER NOTES

1.THE CONTRACTOR SHALL PROVIDE,TO THE ENGINEER OF RECORD ,A SCHEDULE OF INVERT ELEVATIONS OF ALL SANITARY MANHOLES PRIOR TO THE PLACEMENT OF THE LIME ROCK BASE COURSE.THIS SCHEDULE TO BE PROVIDED BY THE REGISTERED LAND SURVEYOR SUBMITTING THE "AS-BUILT" DRAWINGS FOR THIS PROJECT.

2.SANITARY SEWER SERVICES SHALL BE 6"PVC WITH A MINIMUM SLOPE OF 0.006 FEET PER FOOT AND SHALL BE TERMINATED AT THE RIGHT-OF-WAY LINE WITH A DEPTH OF 24" TO 48" FROM THE FINAL FINISHED GRADE OF THE DEVELOPED LOTS.DEPTHS GREATER THAN 48" FROM FINAL FINISHED GRADE SHALL BE READJUSTED BY THE DEVELOPER AT HIS COST.

3.GRAVITY SEWER TO BE CLEANED & TV TESTED BY DEVELOPER AT DEVELOPER'S EXPENSE

4.ALL MANHOLE FRAMES AND COVERS TO BE ADJUSTED TO FINAL FINISHED GRADE.

5.A SEPARATE SEWER SERVICE (6" MIN.) SHALL BE PROVIDED TO THE RIGHT-OF-WAY FOR EACH LOT BEING SERVED.AN "S" SHALL BE ETCHED INTO THE CURB DIRECTLY OVER EACH SERVICE LINE OR IN THE STREET SIDE OF A SIDEWALK IN LINE WITH THE CLEANOUT.

6.GRAVITY SEWER TO BE GREEN IN COLOR

7.NEW GRAVITY SEWER SYSTEM SHALL BE PLUGGED AT NEAREST EXISTING DOWNSTREAM MANHOLE AND SHALL NOT BE REMOVED WITHOUT AUTHORIZATION FROM THE UTLITY COMPANY.EXISTING MANHOLES TO BE COREBORED AND ARRANGEMENTS MADE TO BE REFURBISHED WITH COMPATIBLE MATERIALS IF THE EXISTING MANHOLE IS ALLOWED TO BE USED.

8.FINISHED FLOOR ELEVATIONS SHALL BE GREATER (HIGHER) THAN THE ELEVATION OF THE MANHOLE NEAREST THE SERVICE LATERAL IN ORDER TO AVOID A POTENTIAL BACKUP OF SEWERAGE IN THE HOUSE OR BUILDING.

9.FORCE MAIN MUST PASS A PRESSURE TEST PRIOR TO ACCEPTANCE OF THE SYSTEM.THE PRESSURE TEST SHALL COMPLY WITH AWWA C-600 SECTION 4J STANDARD FOR HYDROSTATIC TESTING.PRESSURE TEST MUST BE WITNESSED AND APPROVED BY AN AUTHORIZED UTLITY COMPANY REPRESENTATIVE.

10.ALL GRAVITY SEWER PIPE TO A 10 FOOT DEPTH OF COVER SHALL BE SDR-26 PVC PIPE (MINIMUM).GRAVITY SEWER PIPE WITH COVER OF 15 FEET (AND IN EASEMENTS) AND GREATER SHALL BE C900 - DRIB. JOINT SHALL BE OF THE BELL AND SPIGOT TYPE AND MEET THE REQUIREMENTS OF THE PIPE REFERRED BEING USED.

11.WHEN A PROPERTY LINE CAN NOT BE DEFINED,THE SEWER CLEANOUT SHALL BE PLACED IN AN UNPAVED AREA AT A DISTANCE NO GREATER THAN 30 FEET FROM THE SEWER MAIN.

12.NOTE: DR-18 TO BE USED ON SEWER LINE CROSSING WHERE STORM DRAIN IS WITHIN 24 INCHES ABOVE GRAVITY ALSO JOINT TO BE CENTERED AT CROSSING

13.ALL MANHOLES TO HAVE MINIMUM 24" HINGED RING AND COVER EAST JORDAN OR APPROVED EQUIVALENT

14.SEWER PLUGS USED DURING THE CONSTRUCTION OR CONNECTION TO A SYSTEM SHALL HAVE THE CONTRACTOR'S NAME PERMANENTLY STAMPED.

15.THE MANHOLE LINER SHALL BE SPECTRA SHIELD OR APPROVED EQUIVALENT.

16.IN ACCORDANCE WITH THE DEPARTMENT OF ENVIRONMENTAL PROTECTION (DEP) REQUIREMENTS,LEAKAGE TESTING SHALL BE PERFORMED ON ALL SEGMENTS OF THE SEWER SYSTEM.TESTING MAY INCLUDE APPROPRIATE WATER OR LOW PRESSURE AIR TESTING.TEST METHODS SHALL TAKE INTO CONSIDERATION THE RANGE IN GROUNDWATER ELEVATIONS DURING THE TEST AND ANTICIPATED DURING THE DESIGNED LIFE OF THE SEWER.NO LEAKAGE ALLOWED IN SYSTEM.

17.RESTRAINT JOINTS TO BE USED THROUGHOUT ON FORCE MAIN

18. ALL FORCE MAIN TO BE PVC (DR-18)

LEGEND

- EXISTING VALVE
- WM — EXISTING WATER LINE
- SAN — EXISTING SANITARY SEWER
- EXISTING FIRE HYDRANT
- SAN — PROPOSED SANITARY SEWER
- WM — PROPOSED WATER LINE
- PROPOSED FIRE HYDRANT
- EXISTING EDGE OF PAVEMENT
- EXISTING PROPERTY LINE
- 15.3 — PROPOSED SPOT ELEVATION
- S-5 — DRAINAGE STRUCTURE
- P-1 — PIPE
- 15.0 — PROPOSED CONTOUR
- PROPOSED EDGE OF PAVEMENT
- PROPOSED PROPERTY LINE
- PROPOSED R.O.W. LINE
- 16 — EXISTING CONTOUR

$$FileName$$

$$time$$

$$date$$

No.	By	Date	Revision
J			
I			
H			
G			
F			
E			
D			
C	MP	1-6-20	Revised Phase Lines
B	MP	10-30-19	Revised Per C.O.F.B. Comments
A	MP	9-12-19	TRC Submittal

Scale: NONE
Project Mgr: AG
Designed by: AG
Drawn by: MP
QA/QC: NG

Gillette & Associates, Inc.
20 South 4th Street
Fernandina Beach, FL 32034

Certificate of Authorization No. 9332

DO NOT SCALE THIS DRAWING -- DIMENSIONS AND NOTES TAKE PREFERENCE. DRAWING IS REDUCED IF LESS THAN 22" x 34"

G & A
GILLETTE & ASSOCIATES, INC
20 SOUTH 4TH STREET
FERNANDINA BEACH, FL 32034
PHONE: (904) 261-8819
FAX: (904) 261-9905

PRIVATE COMMERCIAL HANGAR

CLAY LEE

INDEX SHEET

Registered Professional

SHEET NO.
IN-1
2 of 12

Issue Date
September 12, 2019

Project No.
19-10.31

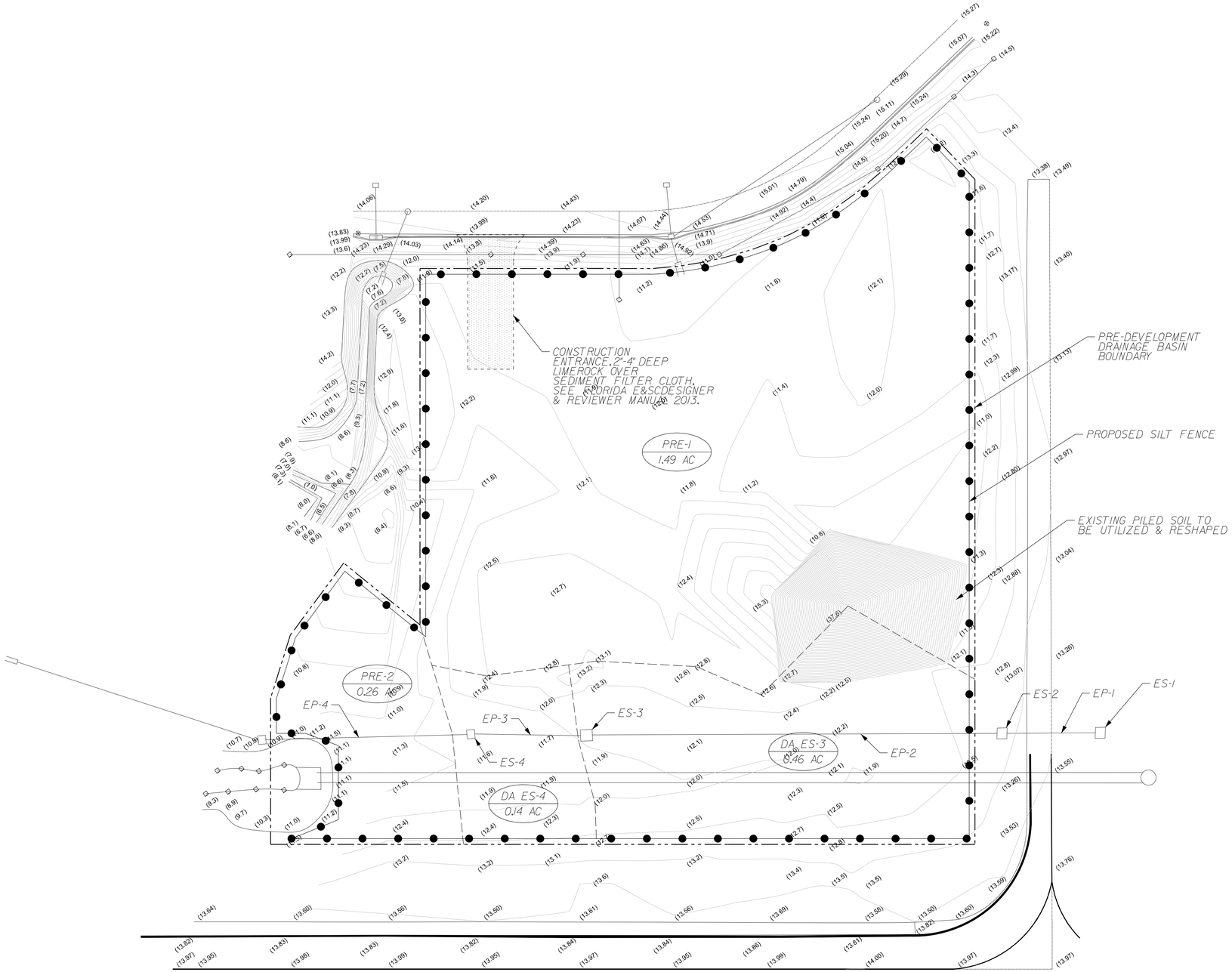

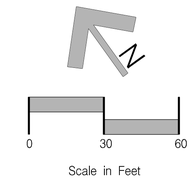

LEGEND

SILT FENCE

SILT FENCE APPLICATIONS

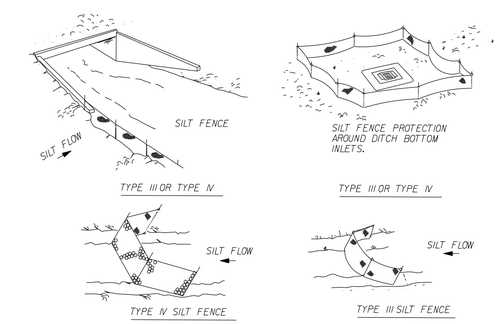

TYPE III SILT FENCE

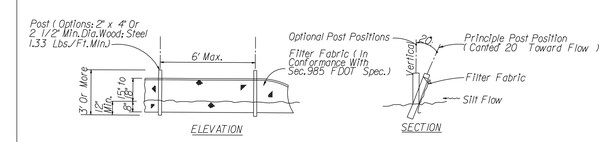

No.	By	Date	Revision
J			
I			
H			
G			
F			
E			
D			
C	MP	1–6–20	Revised Phase Lines
B	MP	10–30–19	Revised Per C.O.F.B. Comments
A	MP	9–12–19	TRC Submittal

Scale: 1" = 30'

Project Mgr: AG

Designed by: AG

Drawn by: MP

QA/QC: NG

Gillette & Associates, Inc.
20 South 4th Street
Fernandina Beach, FL 32034

Certificate of Authorization No. 9332

DO NOT SCALE THIS DRAWING – DIMENSIONS AND NOTES TAKE PREFERENCE. DRAWING IS REDUCED IF LESS THAN 22" x 34"

G & A‡
GILLETTE & ASSOCIATES, INC
20 SOUTH 4TH STREET
FERNANDINA BEACH, FL 32034
PHONE: (904) 261-8819
FAX: (904) 261-9905

PRIVATE COMMERCIAL HANGAR

CLAY LEE

PREDEVELOPMENT DRAINAGE PLAN

Registered Professional

SHEET NO.
PRE-1
3 of 12

Issue Date
September 12, 2019

Project No.
19–10.31

$$FileName$$ $$time$$ $$date$$

GEOMETRY NOTES:

PID #06-2N-28-0000-0001-0000
ZONING: IA
FLUM: INDUSTRIAL
TOTAL ACREAGE: 2.36 AC (102,714 SF)

ADDRESSES:
11,960 SF HANGAR: 2430 JAMESTOWN ROAD
15,600 SF HANGAR: 2440 JAMESTOWN ROAD

BOTH HANGARS WILL BE METAL AND OF IIA CONSTRUCTION

PLANNED USE: HANGAR BUILDING CLUSTER & OFFICE
HANGAR BUILDING WEST AREA = 15,600 SF
HANGAR BUILDING EAST AREA = 11,960 SF
TOTAL BUILDING AREA = 27,560 SF
FLOOR AREA RATIO = 26.8%

TOTAL IMPERVIOUS SURFACE AREA = 67,013 SF
IMPERVIOUS SURFACE AREA RATIO = 65.2%
(MAX ALLOWABLE IMPERVIOUS SURFACE AREA RATIO 75%)

AIRPORT PARKING REQUIREMENTS:
1 SPACE / 1,500SF OF HANGAR
1 SPACE / 200SF OF OFFICE

PHASE 1 (WEST HANGAR):
12,000SF HANGAR SPACE / 1,500SF = 8 SPACES
1,800SF OFFICE SPACE / 200SF = 9 SPACES
17 SPACES PROVIDED
16 REGULAR + 1 ADA
PARKING LOT AREA = 10,496 SF
PARKING AREA RATIO = 10.2%

PHASE 2 (EAST HANGAR):
9,200SF HANGAR SPACE / 1,500SF = 7 SPACES
1,300SF OFFICE SPACE / 200SF = 7 SPACES
14 SPACES PROVIDED
13 REGULAR + 1 ADA
PARKING LOT AREA = 12,764
PARKING AREA RATIO = 12.4%

20% OF LOT AREA REQUIRED TO BE LANDSCAPED
REQUIRED LANDSCAPING = 20,543 SF
PROVIDED LANDSCAPING = 33,755 SF

ALL PARKING SPACES TO BE PERVIOUS CONCRETE

SETBACKS:
FRONT = 0'
REAR = 0'
SIDE = 25'

LEGEND:

NFPA 409 - BOTH HANGARS
OCCUPANCY: GROUP S-1
FBC CONSTRUCTION TYPE: IIB
NFPA CONSTRUCTION TYPE: II(000)
SINGLE FIRE AREA: 12,000 S.F.
HANGAR GROUP: III
HANGAR BLDG CLUSTER WITH TOTAL MAXIMUM FIRE AREA LESS THAN 24,000 S.F.

CONCRETE
PHASE 1 PARKING
PHASE 2 PARKING
ASPHALT
LANDSCAPE

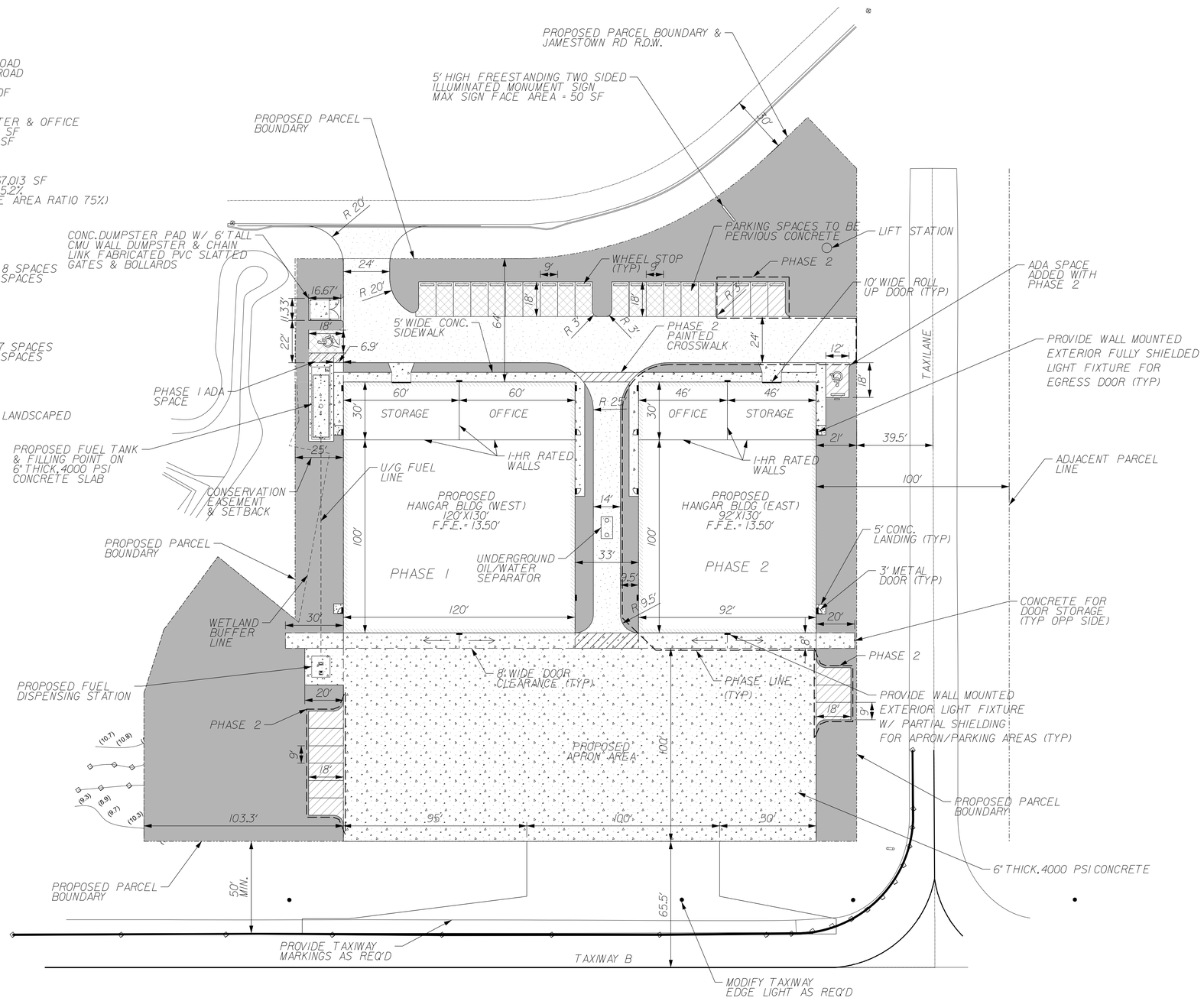

No.	By	Date	Revision
J			
I			
H			
G			
F			
E			
D			
C	MP	1-6-20	Revised Phase Lines
B	MP	10-30-19	Revised Per C.O.F.B. Comments
A	MP	9-12-19	TRC Submittal

Scale: 1" = 30'
Project Mgr: AG
Designed by: AG
Drawn by: MP
QA/QC: NG

Gillette & Associates, Inc.
20 South 4th Street
Fernandina Beach, FL 32034

Certificate of Authorization No. 9332

DO NOT SCALE THIS DRAWING - DIMENSIONS AND NOTES TAKE PREFERENCE. DRAWING IS REDUCED IF LESS THAN 22" x 34"

G & A
GILLETTE & ASSOCIATES, INC
20 SOUTH 4TH STREET
FERNANDINA BEACH, FL 32034
PHONE: (904) 261-8819
FAX: (904) 261-9905

PRIVATE COMMERCIAL HANGAR

CLAY LEE

GEOMETRY PLAN

Registered Professional

SHEET NO.
GE-1
4 of 12
Issue Date
September 12, 2019
Project No.
19-10.31

$$FileName$$
$$time$$

STRUCTURE TABLE						
NAME	TYPE	TOP/ INLET ELEV.	INVERT ELEVATION N	S	E	W
ES–1	"C" INLET	11.65	–	–	–	4.45
ES–2	"C" INLET	11.77	3.50	–	4.26	4.25
ES–3	"C" INLET	11.91	–	–	3.62	3.54
ES–4	"C" INLET	11.72	–	–	3.59	3.50
ES–5	"C" INLET	11.61	–	–	3.35	3.29
ES–6	MES	–	–	–	1.62	–
S–1	"C" INLET	12.50	–	–	4.87	–
S–2	"C" INLET	12.49	–	3.62	–	3.90
S–3	MES	–	–	–	9.20	–
S–4	MES	–	–	–	–	9.00

PIPE TABLE					
NAME	FROM	TO	SIZE	LENGTH	MATERIAL
EP–1	ES–1	ES–2	36"	46'	RCP
EP–2	ES–2	ES–3	36"	212'	RCP
EP–3	ES–3	ES–4	36"	55'	RCP
EP–4	ES–4	ES–5	36"	105'	RCP
EP–5	ES–5	ES–6	36"	133'	RCP
P–1	S–1	S–2	36"	227'	RCP
P–2	S–2	ES–3	36"	199'	RCP
P–3	S–3	S–4	18"	55'	CLASS V RCP

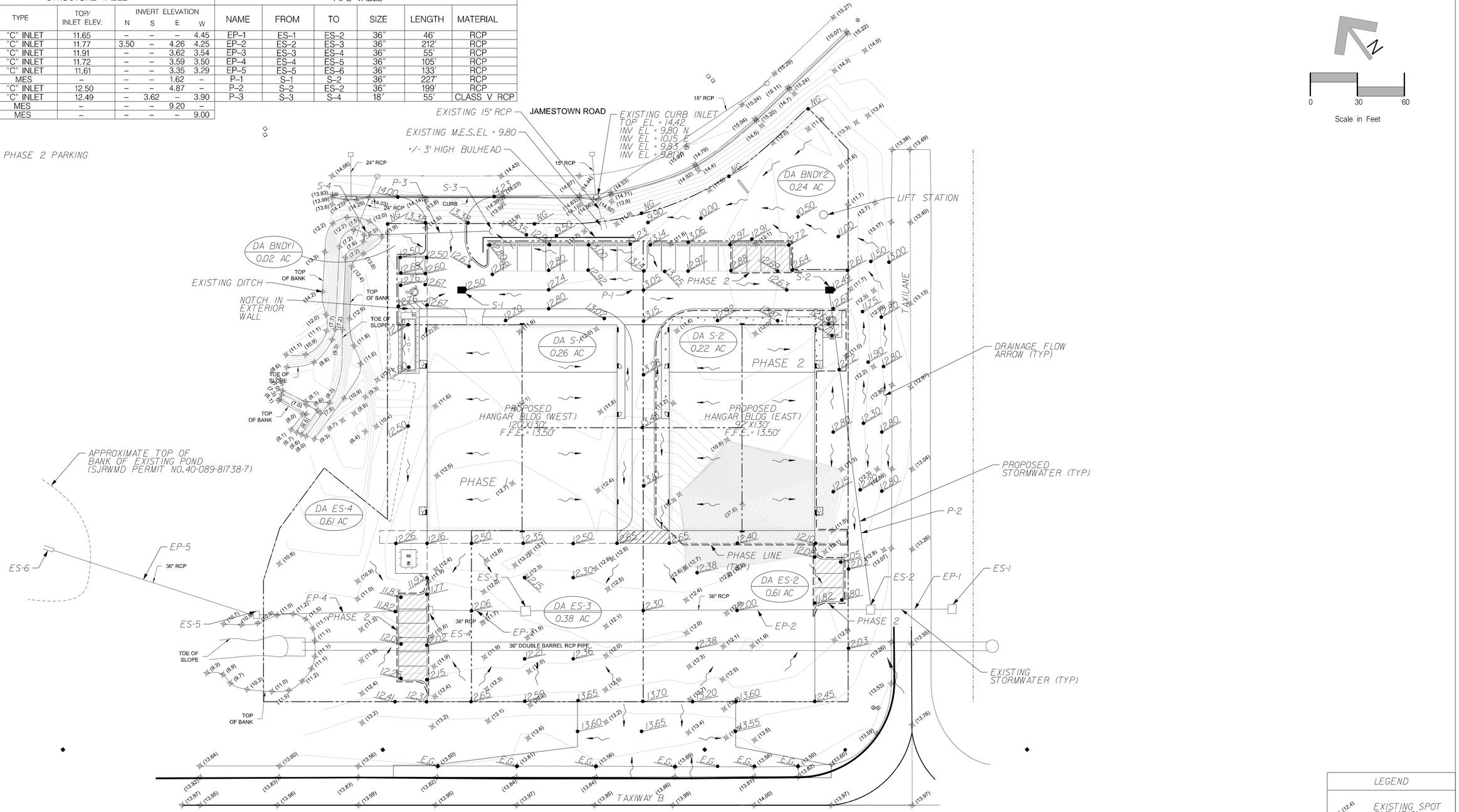

LEGEND	
(12.4)	EXISTING SPOT ELEVATION
12.00	PROPOSED SPOT ELEVATION

No.	By	Date	Revision
J			
I			
H			
G			
F			
E			
D			
C	MP	1–6–20	Revised Phase Lines
B	MP	10–30–19	Revised Per C.O.F.B. Comments
A	MP	9–12–19	TRC Submittal

Scale: 1" = 30'
Project Mgr: AG
Designed by: AG
Drawn by: MP
QA/QC: NG

Gillette & Associates, Inc.
20 South 4th Street
Fernandina Beach, FL 32034

Certificate of Authorization No. 9332

DO NOT SCALE THIS DRAWING – DIMENSIONS AND NOTES TAKE PREFERENCE. DRAWING IS REDUCED IF LESS THAN 22" x 34"

G & A
GILLETTE & ASSOCIATES, INC
20 SOUTH 4TH STREET
FERNANDINA BEACH, FL 32034
PHONE: (904) 261-8819
FAX: (904) 261-9905

PRIVATE COMMERCIAL HANGAR

CLAY LEE

POST-DEVELOPMENT DRAINAGE PLAN

Registered Professional

SHEET NO.
DR-1
5 of 12
Issue Date
September 12, 2019
Project No.
19–10.31

$$FileName$$
$$time$$
$$date$$

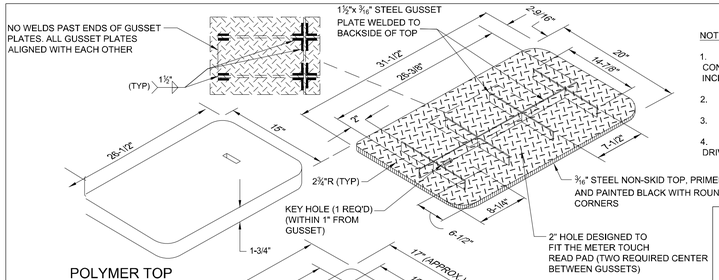

POLYMER BOX

NOTES:

1. THE STANDARD BOX (FLARED OUTWARD WALLS) & TOP SHALL BE MADE OF POLYMER CONCRETE. (SIMILAR TO OLD BROOKS SERIES 65). BOX WALLS SHALL BE FIBERGLASS. BOX, INCLUDING THE INSIDE LIP, AND TOP SHALL MEET A-8 (ATSM C857) LOAD RATING.
2. ALL SIZES SHOWN ARE IN INCHES AND ARE APPROXIMATE SIZES.
3. POLYMER BOX APPROXIMATE WEIGHT 50lbs. POLYMER TOP APPROXIMATE WEIGHT 50lbs.
4. ALL SEWER SERVICE BOXES SHALL BE LOCATED IN NON-TRAFFIC AREAS (NOT IN THE ROADWAY, DRIVEWAYS OR SIDEWALKS).

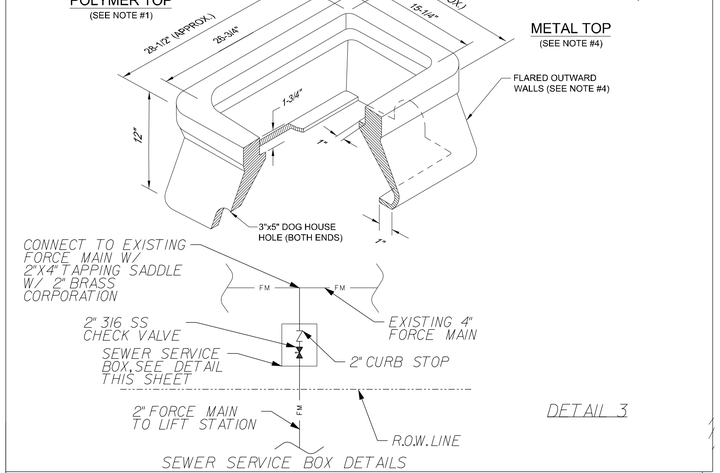

E-ONE DH152-93 SERIES LIFT STATION DETAILS

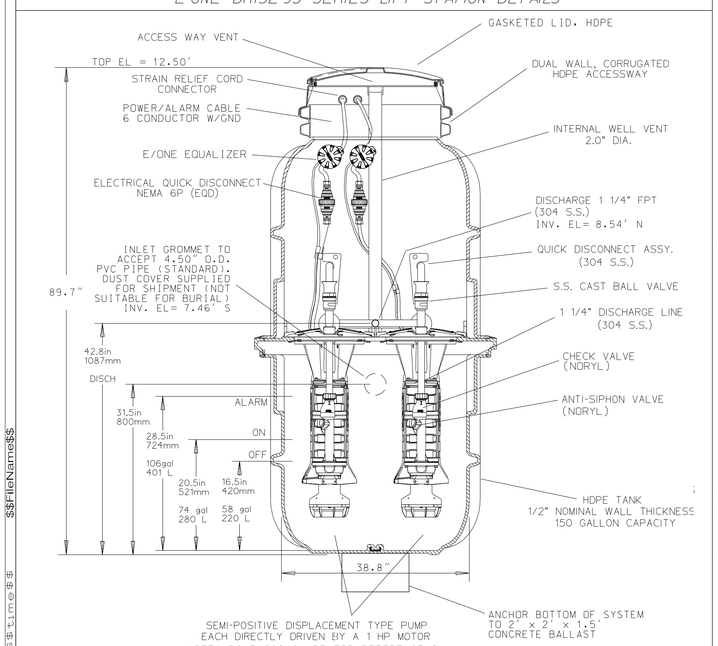

NOTE: DIMENSIONS ARE FOR REFERENCE ONLY

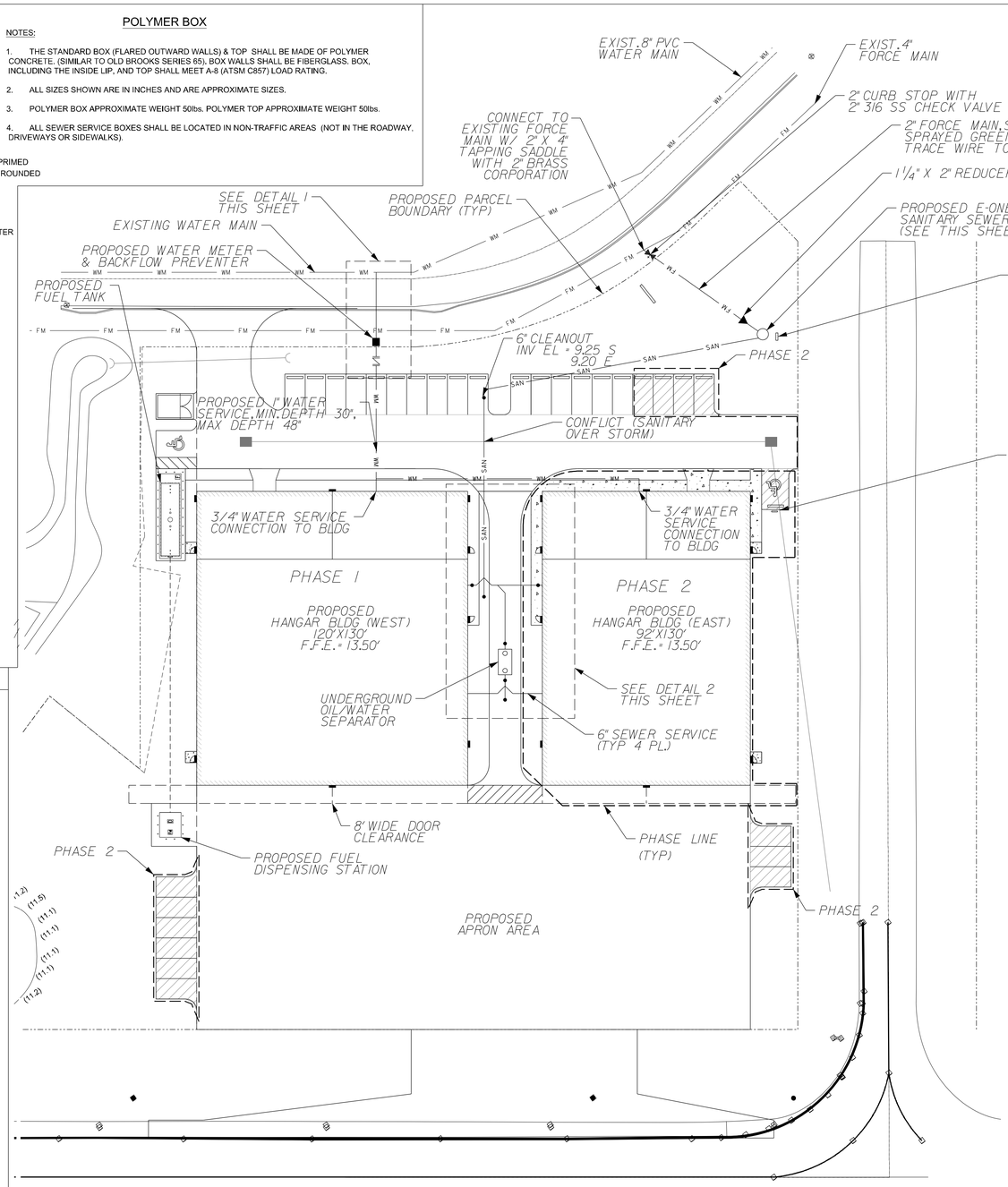

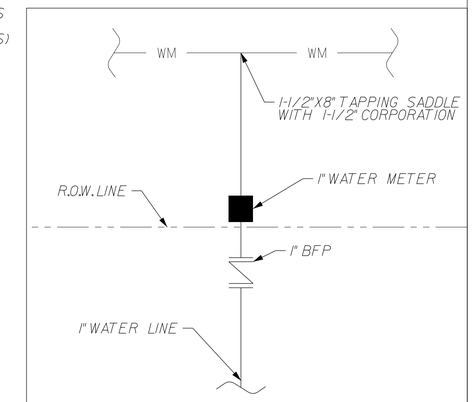

DETAIL 1
WATER SERVICE DETAILS

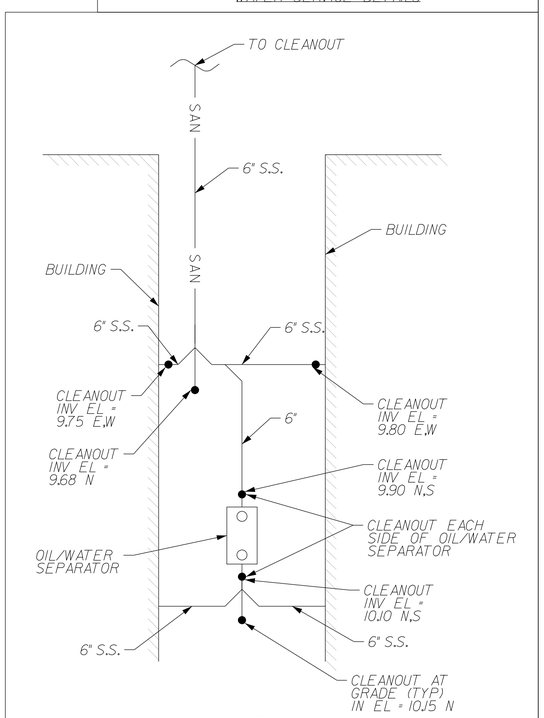

DETAIL 2
SEWER CONNECTION DETAILS

No.	By	Date	Revision
J			
I			
H			
G			
F			
E			
D			
C	MP	1-6-20	Revised Phase Lines
B	MP	10-30-19	Revised Per C.O.F.B. Comments
A	MP	9-12-19	TRC Submittal

Scale: 1" = 30'
Project Mgr: AG
Designed by: AG
Drawn by: MP
QA/QC: NG

Gillette & Associates, Inc.
20 South 4th Street
Fernandina Beach, FL 32034

Certificate of Authorization No. 9332

DO NOT SCALE THIS DRAWING – DIMENSIONS AND NOTES TAKE PREFERENCE. DRAWING IS REDUCED IF LESS THAN 22" x 34"

G & A‡
GILLETTE & ASSOCIATES, INC
20 SOUTH 4TH STREET
FERNANDINA BEACH, FL 32034
PHONE: (904) 261-8819
FAX: (904) 261-9905

PRIVATE COMMERCIAL HANGAR

CLAY LEE

UTILITY PLAN

Registered Professional

SHEET NO.
UT-1
6 of 12
Issue Date
September 12, 2019
Project No.
19-10.31

$$FileName$$
$$time$$

TREE TABLE

NUMBER	SIZE AND TYPE	SAVED? (Y/N)
T1	11" PINE	N
T2	9" PINE	N
T3	12" PINE	N
T4	7" PINE	N
T5	8" PINE	N
T6	10" PINE	N
T7	6" PINE	N
T8	12" PINE	N
T9	7" PINE	N
T10	12" PINE	N
T11	13" PINE	Y
T12	19" DOUBLE WATER OAK	N
T13	9" LAURAL OAK	N
T14	5" WATER OAK	N
T15	6" WATER OAK	N
T16	10" WATER OAK	Y
T17	8" WATER OAK	N
T18	16" DOUBLE WATER OAK	N
T19	8" WATER OAK	N
T20	9" WATER OAK	N
T21	9" WATER OAK	N
T22	6" WATER OAK	N
T23	9" WATER OAK	N
T24	16" DOUBLE WATER OAK	Y
T25	5" WATER OAK	Y
T26	8" WATER OAK	Y
T27	7" MAGNOLIA	Y
T28	7" WATER OAK	Y
T29	6" WATER OAK	Y
T30	6" WATER OAK	Y
T31	6" WATER OAK	N
T32	8" PINE	N
T33	14" PINE	N
T34	12" PINE	N
T35	10" PINE	N
T36	10" PINE	N
T37	12" PINE	N
T38	7" WATER OAK	N
T39	16" PINE	N
T40	7" PINE	N
T41	5" WATER OAK	N
T42	6" WATER OAK	N
T43	10" WATER OAK	N
T44	12" WATER OAK	N
T45	5" WATER OAK	N
T46	20" TRIPLE WATER OAK	N
T47	9" WATER OAK	N
T48	5" WATER OAK	N
T49	13" DOUBLE WATER OAK	N
T50	8" WATER OAK	N
T51	6" WATER OAK	N
T52	12" WATER OAK	N
T53	12" DOUBLE WATER OAK	N
T54	7" WATER OAK	N
T55	5" WATER OAK	N
T56	7" WATER OAK	N
T57	7" WATER OAK	N
T58	5" WATER OAK	N
T59	6" WATER OAK	N
T60	7" LAURAL OAK	N
T61	15" DOUBLE WATER OAK	N
T62	12" WATER OAK	N
T63	11" DOUBLE WATER OAK	N

TREE TABLE

NUMBER	SIZE AND TYPE	SAVED? (Y/N)
T64	9" LAURAL OAK	N
T65	14" PINE	N
T66	14" PINE	N
T67	6" WATER OAK	N
T68	11" PINE	N
T69	6" WATER OAK	N
T70	7" WATER OAK	N
T71	6" WATER OAK	N
T72	6" WATER OAK	N
T73	10" PINE	N
T74	6" WATER OAK	N
T75	6" LAURAL OAK	N
T76	6" WATER OAK	N
T77	11" WATER OAK	N
T78	7" WATER OAK	N
T79	15" DOUBLE WATER OAK	N
T80	8" WATER OAK	N
T81	9" WATER OAK	N
T82	7" WATER OAK	N
T83	8" WATER OAK	N
T84	9" WATER OAK	N
T85	8" WATER OAK	N
T86	6" WATER OAK	N
T87	9" WATER OAK	N
T88	13" WATER OAK	N
T89	10" WATER OAK	N
T90	12" DOUBLE WATER OAK	N
T91	7" WATER OAK	N
T92	17" DOUBLE WATER OAK	N
T93	26" WATER OAK	N
T94	5" WATER OAK	N
T95	6" WATER OAK	N
T96	7" WATER OAK	N
T97	12" WATER OAK	N
T98	8" WATER OAK	N
T99	6" WATER OAK	N
T100	5" WATER OAK	N
T101	9" WATER OAK	N
T102	8" WATER OAK	N
T103	6" WATER OAK	N
T104	5" WATER OAK	N
T105	7" PINE	N
T106	7" WATER OAK	N
T107	5" WATER OAK	N
T108	6" WATER OAK	N
T109	7" WATER OAK	N
T110	13" DOUBLE WATER OAK	N
T111	25" WATER OAK CLUSTER	Y
T112	18" TRIPLE WATER OAK	N
T113	13" DOUBLE WATER OAK	N
T114	8" WATER OAK	N
T115	12" WATER OAK	N
T116	6" WATER OAK	N
T117	9" WATER OAK	N
T118	5" WATER OAK	N
T119	12" DOUBLE WATER OAK	Y
T120	5" WATER OAK	N
T121	7" WATER OAK	N
T122	7" WATER OAK	N
T123	13" DOUBLE WATER OAK	N
T124	13" DOUBLE WATER OAK	N
T125	7" WATER OAK	N
T126	8" WATER OAK	N

TREE TABLE

NUMBER	SIZE AND TYPE	SAVED? (Y/N)
T127	10" WATER OAK	N
T128	5" WATER OAK	N
T129	5" WATER OAK	N
T130	9" WATER OAK	N
T131	10" WATER OAK	N
T132	7" WATER OAK	N
T133	8" WATER OAK	N
T134	10" DOUBLE WATER OAK	N
T135	5" WATER OAK	N
T136	14" DOUBLE WATER OAK	N
T137	8" WATER OAK	N
T138	11" DOUBLE WATER OAK	N
T139	5" WATER OAK	N
T140	8" WATER OAK	N
T141	6" WATER OAK	N
T142	5" CEDAR	N
T143	5" CEDAR	N
T144	14" DOUBLE WATER OAK	N
T145	9" WATER OAK	N
T146	6" WATER OAK	N
T147	16" DOUBLE WATER OAK	N
T148	6" WATER OAK	N
T149	9" WATER OAK	N
T150	10" PINE	N
T151	10" PINE	N
T152	12" WATER OAK	Y
T153	9" WATER OAK	Y
T154	6" WATER OAK	Y
T155	8" WATER OAK	Y
T156	5" WATER OAK	Y
T157	10" PINE	N
T158	10" PINE	N
T159	10" PINE	N
T160	15" PINE	N
T161	12" PINE	N
T162	10" PINE	N
T163	12" PINE	N
T164	10" PINE	N
T165	12" PINE	N
T166	10" PINE	N
T167	11" PINE	N
T168	7" PINE	N
T169	8" PINE	N
T170	12" PINE	Y
T171	5" PINE	Y
T172	6" WATER OAK	N
T173	12" PINE	N
T174	6" WATER OAK	N
T175	6" WATER OAK	N
T176	8" WATER OAK	Y
T177	7" LAURAL OAK	Y
T178	13" PINE	N
T179	6" WATER OAK	N
T180	10" DOUBLE WATER OAK	N
T181	5" WATER OAK	N
T182	10" PINE	Y
T183	6" WATER OAK	Y
T184	8" WATER OAK	Y
T185	7" WATER OAK	Y
T186	10" PINE	Y
T187	10" PINE	Y
T188	16" TRIPLE WATER OAK	N
T189	5" WATER OAK	N

LANDSCAPING NOTES:

20% OF LOT AREA REQ'D TO BE LANDSCAPED
REQUIRED LANDSCAPING = 20,545 SF
PROVIDED LANDSCAPING = 33,755 SF

PER AIRPORT LDC NO NEW TREES SHALL BE PERMITTED WITHIN THE AIR OPERATIONS AREA

PUBLIC AREA (NON AIR OPERATIONAL AREA) = 23,640 SF
1 SHADE TREE REQ'D PER 1500 SF OF PUBLIC AREA
(23,640 SF) X (1 SHADE TREE/1500 SF) = 18 SHADE TREES REQ'D

PARKING LOT AREA = 9,524 SF
10% OF VEHICULAR USE AREA REQ'D TO BE LANDSCAPED
REQUIRED PARKING LOT LANDSCAPING = 952 SF
PROVIDED PARKING LOT LANDSCAPING = 4,110 SF
1 SHADE TREE PER 400 SF OF REQ'D PARKING LOT LANDSCAPE AREA
(947 SF) X (1 SHADE TREE/400 SF) = 2 SHADE TREES REQ'D

20 TOTAL SHADE TREES REQUIRED

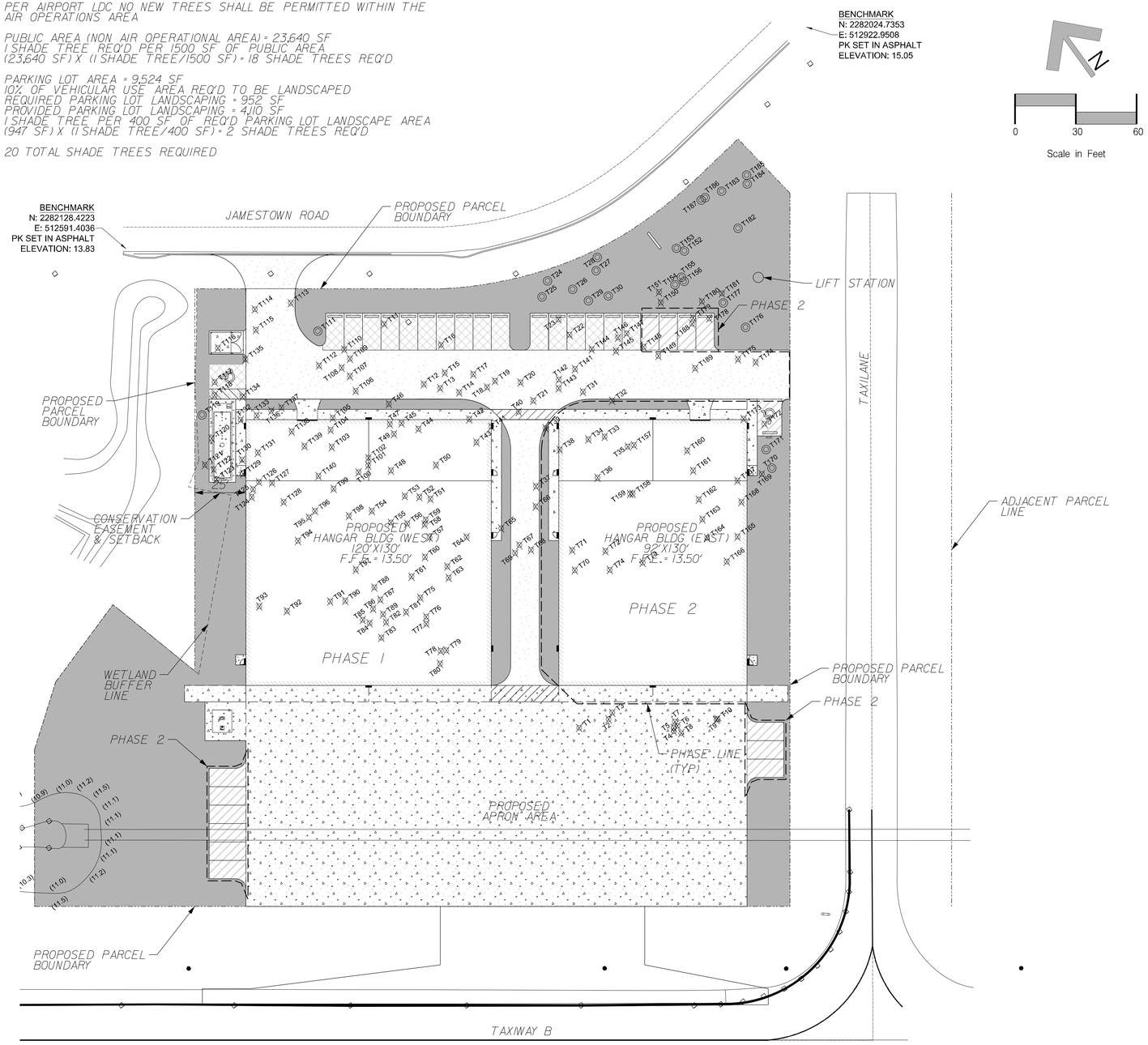

LEGEND

- CONCRETE
- ASPHALT
- PERVIOUS CONCRETE
- LANDSCAPE
- ○ TREES TO REMAIN - 26
- X TREES TO BE REMOVED - 163
- T11 TREE ID NUMBER

TREE MITIGATION DATA

TOTAL INCHES SAVED	238"
TOTAL INCHES REMOVED	1480"
% SAVED (25% REQ'D)	14.0%
REQ'D INCHES IN NEW TREES	39"
PROVIDED TREE PLANTING	49"

No.	By	Date	Revision
J			
I			
H			
G			
F			
E			
D			
C	MP	1–6–20	Revised Phase Lines
B	MP	10–30–19	Revised Per C.O.F.B. Comments
A	MP	9–12–19	TRC Submittal

Scale: 1" = 30'
Project Mgr: AG
Designed by: AG
Drawn by: MP
QA/QC: NG

Gillette & Associates, Inc.
20 South 4th Street
Fernandina Beach, FL 32034

Certificate of Authorization No. 9332

DO NOT SCALE THIS DRAWING – DIMENSIONS AND NOTES TAKE PREFERENCE. DRAWING IS REDUCED IF LESS THAN 22" x 34"

G & A
GILLETTE & ASSOCIATES, INC
20 SOUTH 4TH STREET
FERNANDINA BEACH, FL 32034
PHONE: (904) 261-8819
FAX: (904) 261-9905

PRIVATE COMMERCIAL HANGAR

CLAY LEE

TREE MITIGATION

Registered Professional

SHEET NO.
LS-1
7 of 12

Issue Date
September 12, 2019

Project No.
19–10.31

$$FileName$$
$$Time$$
$$Date$$

LANDSCAPING REQUIREMENTS:

20% OF LOT AREA REQ'D TO BE LANDSCAPED
REQUIRED LANDSCAPING = 20,545 SF
PROVIDED LANDSCAPING = 33,755 SF

PER AIRPORT LDC NO NEW TREES SHALL BE PERMITTED WITHIN THE AIR OPERATIONS AREA

PUBLIC AREA (NON AIR OPERATIONAL AREA) = 23,640 SF
1 SHADE TREE REQ'D PER 1500 SF OF PUBLIC AREA
(23,640 SF) X (1 SHADE TREE/1500 SF) = 18 SHADE TREES REQ'D

PARKING LOT AREA = 9,524 SF
10% OF VEHICULAR USE AREA REQ'D TO BE LANDSCAPED
REQUIRED PARKING LOT LANDSCAPING = 952 SF
PROVIDED PARKING LOT LANDSCAPING = 4,110 SF
1 SHADE TREE PER 400 SF OF REQ'D PARKING LOT LANDSCAPE AREA
(952 SF) X (1 SHADE TREE/400 SF) = 2 SHADE TREES REQ'D

20 TOTAL SHADE TREES REQUIRED

34 EXISTING TREES
17 ADDITIONAL TREES PROVIDED

LEGEND	TREE MITIGATION DATA	
CONCRETE	TOTAL INCHES SAVED	238"
ASPHALT	TOTAL INCHES REMOVED	1480"
TREES TO REMAIN - 26	% SAVED (25% REQ'D)	14.0%
	REQ'D INCHES IN NEW TREES	39"
	PROVIDED TREE PLANTING	49"

PLANT/MATERIAL SCHEDULE

	QUANTITY	KEY	SPECIES	SIZE/REMARKS
	51	VO	WALTER'S VIBURNUM	24" HT., 3 GAL
			VIBURNUM OBARTUM	
	46	LJ	LIGUSTRUM	30" HT., 3 GAL
			LIGUSTRUM JAPONICUM	
	12	MG	SOUTHERN MAGNOLIA	12' HT., 3" CAL.
			MAGNOLIA GRANDIFLORA	
	5	MV	MELALEUCA VIMINALIS	8' HT., 3" CAL.
			WEEPING BOTTLEBRUSH	
	AREA	AG	PERENNIAL PEANUT	1 GAL FULL
			ARACHIS GLABRATA	

NOTE:
1. ALL BEDS ARE TO BE MULCHED WITH A MINIMUM OF 3" THICK BONDED RUBER MULCH
2. LANDSCAPING WITHIN AIR OPERATIONS AREA SHALL BE GRASS OR COVERED WITH GROUND COVER (NO TREES OR SHRUBS PERMITTED IN THE AIR OPERATIONS AREA)
3. ST. AUGUSTINE SOD SHALL BE USED IN SWALES AND AREAS SUBJECT TO EROSION

XERISCAPE LANDSCAPE REQUIREMENTS

STANDARD	POINTS
25% TO 50% OF THE GRASS AREAS USE DROUGHT TOLERANT SPECIES	5
LESS THAN 75% OF THE LANDSCAPED AREA CONTAINS SOD	10
COMPACTED MULCHED PLANTING BEDS AT LEAST 3" DEEP ARE USED IN ALL PLANTING AREAS EXCEPT GROUND COVER	10
51% OR MORE OF THE REQUIRED SHRUBS ARE DROUGHT TOLERANT SPECIES	10
25% TO 50% OF THE REQUIRED TREES ARE DROUGHT TOLERANT SPECIES	5
50% INCREASE OVER THE REQUIRED NUMBER OF SHADE TREES IN VEHICULAR USE AREAS	10
TOTAL POINTS (MINIMUM OF 50 POINTS REQUIRED)	50

LANDSCAPING NOTES:

1. PLANT MATERIALS SHALL MEET THE STANDARDS FOR FLORIDA NO.1 OR BETTER, AS SET OUT IN GRADES AND STANDARDS FOR NURSERY PLANTS, DEPARTMENT OF AGRICULTURE, STATE OF FLORIDA.

2. SHRUBS SHALL BE AT LEAST EIGHTEEN (18) INCHES IN HEIGHT AT THE TIME OF INSTALLATION.

3. SHRUBS SHALL BE INSTALLED AT LEAST THIRTY-SIX (36) INCHES APART, MEASURED ON CENTER.

4. ALL SHRUBS AND INTERIOR LANDSCAPING TO RECEIVE 100% IRRIGATION COVERAGE.

5. ALL AREAS SHOWN WITHOUT IMPROVEMENTS AROUND EXISTING TREES SHALL BE LEFT IN THE NATURAL STATE (UNDISTURBED).

6. GRASSED AREAS SHALL BE PLANTED WITH SPECIES NORMALLY GROWN ON PERMANENT LAWNS IN NASSAU COUNTY. GRASSED AREAS MAY BE SODDED, PLUGGED, SPRIGGED, OR SEEDED, PROVIDED THAT FULL COVERAGE SHALL BE ACHIEVED WITHIN ONE (1) YEAR AFTER PLANTING. SOLID SOD SHALL BE USED IN SWALES OR AREAS SUBJECT TO EROSION. GRASS SOD SHALL BE CLEAN AND REASONABLY FREE OF WEEDS AND NOXIOUS PESTS OR DISEASES. GRASS SEED SHALL BE DELIVERED TO THE JOB SITE IN BAGS WITH FLORIDA DEPARTMENT OF AGRICULTURE TAGS ATTACHED INDICATING THE QUALITY CONTROL PROGRAM.

7. INSTALLATION AND MAINTENANCE OF ALL PLANTINGS SHALL BE IN ACCORDANCE WITH ARTICLES 4.05.03(D) AND 4.05.03(E) OF THE CITY OF FERNANDINA BEACH LAND DEVELOPMENT CODE

MAINTENANCE REQUIREMENTS:

1. ALL PLANTINGS SHALL BE CONTINUALLY MAINTAINED IN AN ATTRACTIVE AND HEALTHY CONDITION. MAINTENANCE SHALL INCLUDE, BUT NOT BE LIMITED TO, WATERING, TILLING, FERTILIZING AND SPRAYING, MOWING, WEEDING, REMOVAL OF LITTER AND DEAD PLANT MATERIAL, AND NECESSARY PRUNING AND TRIMMING.

2. REQUIRED PLANTS THAT BECOME DISEASED OR DIE SHALL BE REPLACED NOT LATER THAN THREE (3) MONTHS FOLLOWING THE LOSS OF THE PLANT.

3. THE PROPERTY OWNER IS RESPONSIBLE FOR THE MAINTENANCE OF ALL REQUIRED LANDSCAPING IN A HEALTHY, THRIVING CONDITION.

4. TREES SHALL BE PRUNED ONLY AS NECESSARY TO PROMOTE HEALTHY GROWTH OR TO AVOID POWER LINES. TREES SHALL NOT BE SEVERELY PRUNED OR "HATRACKED" IN ORDER TO PERMANENTLY MAINTAIN GROWTH AT A REDUCED HEIGHT. PRUNING SHALL COMPLY WITH CURRENT NATIONAL ARBORISTS' SOCIETY STANDARDS.

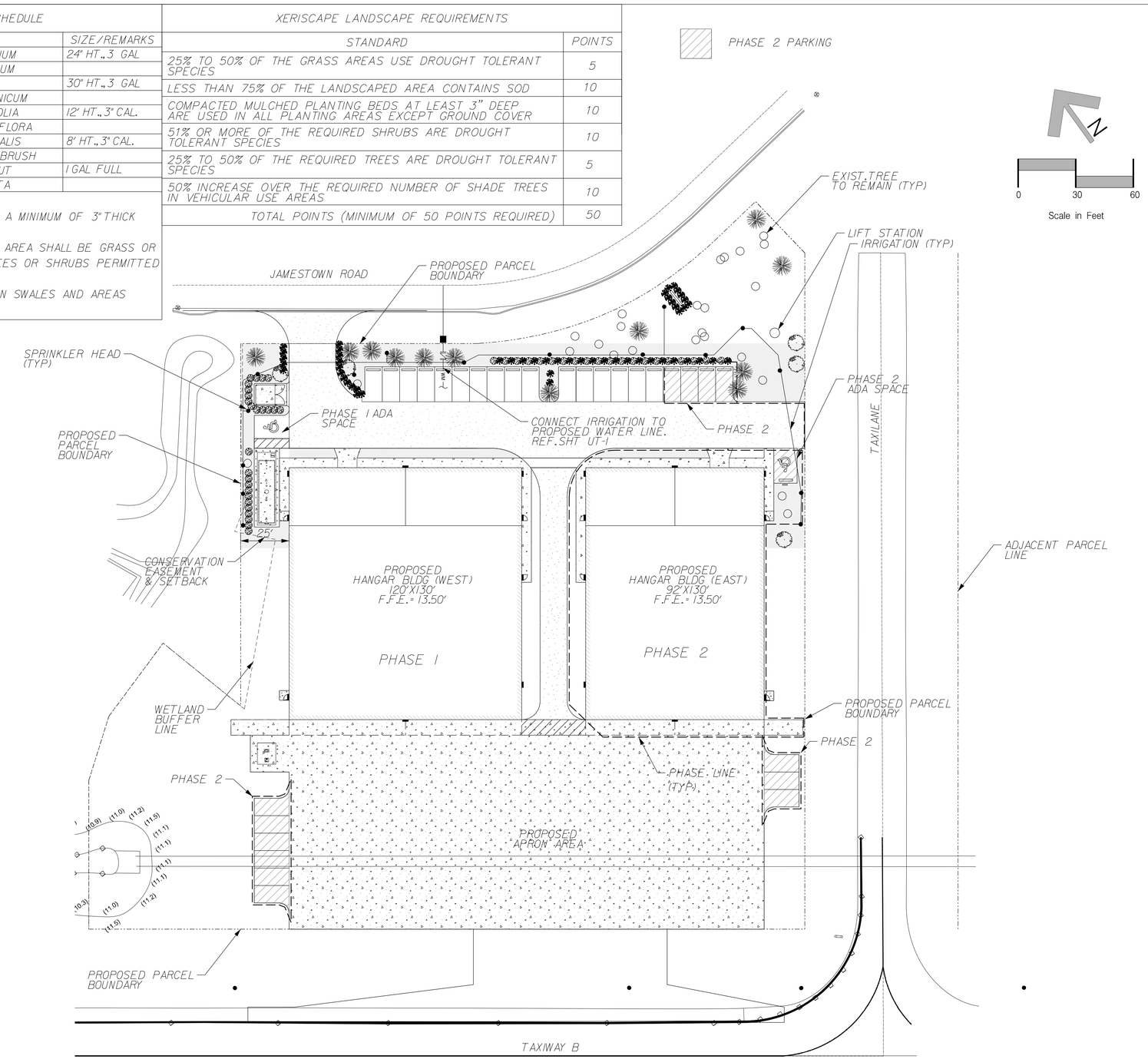

No.	By	Date	Revision
J			
I			
H			
G			
F			
E			
D			
C	MP	1-6-20	Revised Phase Lines
B	MP	10-30-19	Revised Per C.O.F.B. Comments
A	MP	9-12-19	TRC Submittal

Scale: 1" = 30'
Project Mgr: AG
Designed by: AG
Drawn by: MP
QA/QC: NG

Gillette & Associates, Inc.
20 South 4th Street
Fernandina Beach, FL 32034

Certificate of Authorization No. 9332

DO NOT SCALE THIS DRAWING – DIMENSIONS AND NOTES TAKE PREFERENCE. DRAWING IS REDUCED IF LESS THAN 22" x 34"

G & A‡
GILLETTE & ASSOCIATES, INC
20 SOUTH 4TH STREET
FERNANDINA BEACH, FL 32034
PHONE: (904) 261-8819
FAX: (904) 261-9905

PRIVATE COMMERCIAL HANGAR

CLAY LEE

LANDSCAPE PLAN

Registered Professional

SHEET NO.
LS-2
8 of 12

Issue Date
September 12, 2019

Project No.
19-10.31

$$FileName$$

NOTE:

1. ALL SIGNS SHOWN SHALL CONFORM TO FEDERAL ACCESSIBILITY SPECIFICATIONS.
2. ALL SIGNS SHOWN SHALL BE REFLECTORIZED TO SHOW THE SAME COLOR BY NIGHT AS BY DAY.
3. ALL SIGNS SHALL BE SECURELY MOUNTED ON GALVANIZED STEEL CHANNEL POSTS.
4. INSTALL QUANTITY AND AT LOCATIONS REQUIRED BY CODE AND/OR AS INDICATED ON DRAWINGS.CONFIRM ALL HANDICAPPED SIGNAGE CODES.

NOTE: PROVIDE ADDITIONAL "VAN ACCESSIBLE" SIGNAGE AT LOCATIONS REQUIRED BY CODE AND/OR AS INDICATED ON DRAWINGS.

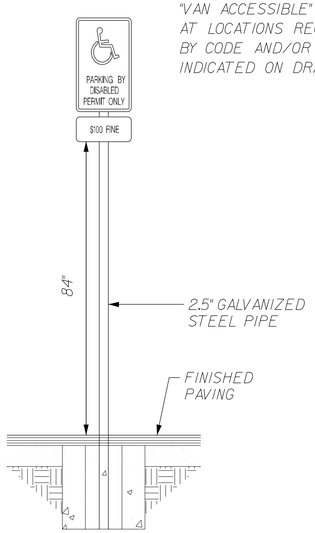

ADA SIGN DETAIL

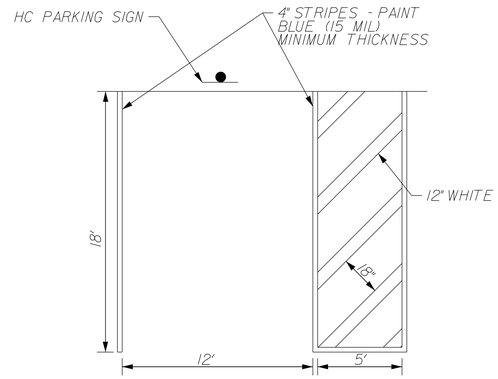

Stall dimension measured from inside to inside striping

Handicap Space and Access aisle to be concrete pads

ADA PARKING DETAIL

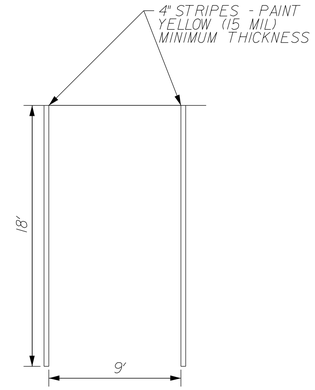

Stall dimension measured from inside to inside striping

TYPICAL PARKING DETAIL

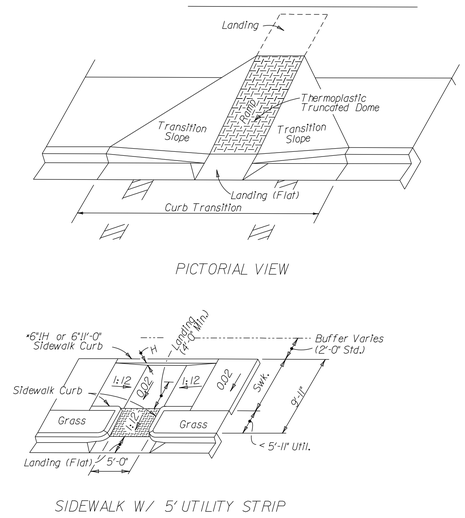

ADA CROSSWALK DETAIL

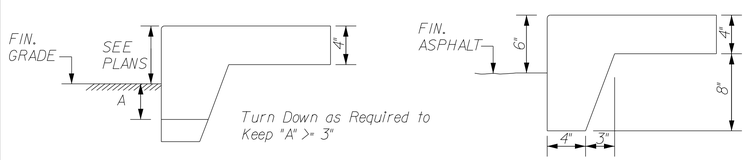

At Grade

At Asphalt Pavement

SIDEWALK TURNDOWN DETAILS

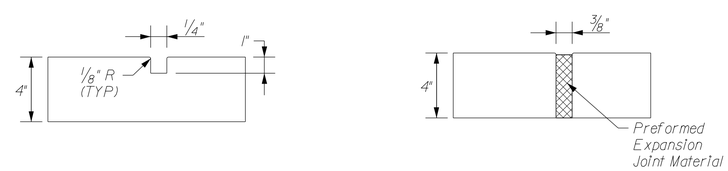

Dummy Joint

Expansion Joint

SIDEWALK JOINT DETAILS

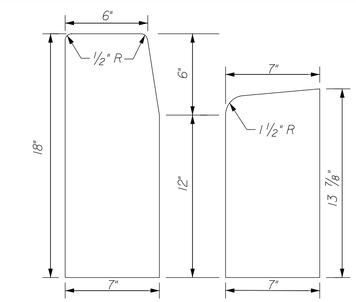

6" HEADER AND DROP CURB

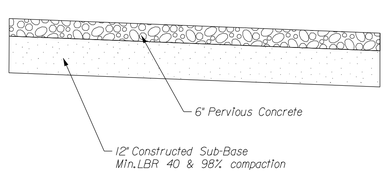

Pervious pavement to be swept and cleaned once every 6 months to maintain permeability

PERVIOUS PAVEMENT DETAIL

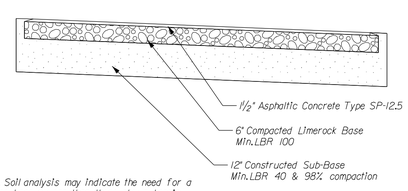

Note: Soil analysis may indicate the need for a thicker base course than those shown herein. The pavement thickness shown herein are not intended to be absolute,but are preliminary criteria & may be modified to accomodate the bearing capacities of various subgrades.

ASPHALT PAVEMENT DETAIL

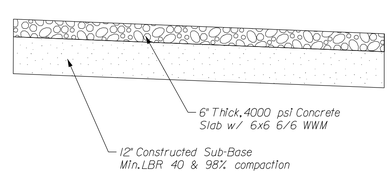

Note: Soil analysis may indicate the need for a thicker base course than those shown herein. The pavement thickness shown herein are not intended to be absolute,but are preliminary criteria & may be modified to accomodate the bearing capacities of various subgrades.

CONCRETE PAVEMENT DETAIL

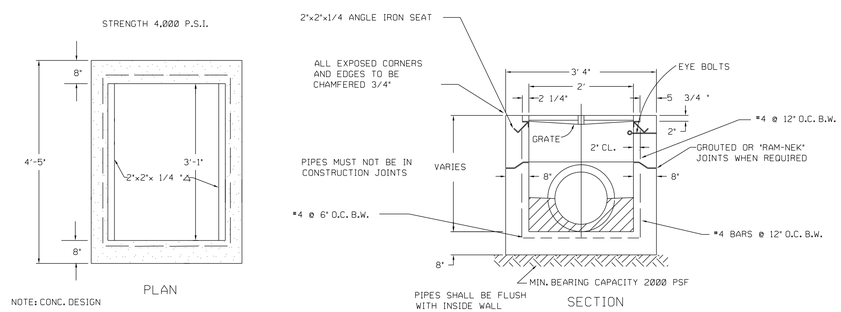

STORM SEWER TYPE "C" INLET

$$FileName$$

$$time$$

No.	By	Date	Revision
J			
I			
H			
G			
F			
E			
D			
C	MP	1-6-20	Revised Phase Lines
B	MP	10-30-19	Revised Per C.O.F.B. Comments
A	MP	9-12-19	TRC Submittal

Scale: NONE

Project Mgr: AG

Designed by: AG

Drawn by: MP

QA/QC: NG

Gillette & Associates, Inc.
20 South 4th Street
Fernandina Beach, FL 32034

Certificate of Authorization No. 9332

DO NOT SCALE THIS DRAWING – DIMENSIONS AND NOTES TAKE PREFERENCE. DRAWING IS REDUCED IF LESS THAN 22" x 34"

G & A
GILLETTE & ASSOCIATES, INC
20 SOUTH 4TH STREET
FERNANDINA BEACH, FL 32034

PHONE: (904) 261-8819
FAX: (904) 261-9905

PRIVATE COMMERCIAL HANGAR

CLAY LEE

MISCELLANEOUS DETAILS

Registered Professional

SHEET NO.
DT-1
9 of 12

Issue Date
September 12, 2019

Project No.
19-10.31

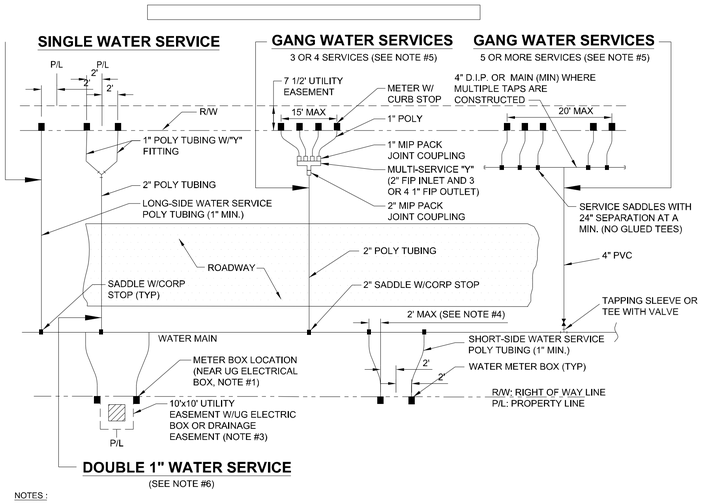

NOTES :

1. THE SKETCHES ABOVE INDICATE TYPICAL WATER SERVICE AND METER BOX LOCATIONS. ACTUAL LOCATIONS OF BOXES MAY VARY SLIGHTLY ACCORDING TO FIELD CONDITIONS ENCOUNTERED. TYPICALLY, THE METER BOX SHALL LOCATED AT THE R/W LINE BUT INSIDE THE 7 1/2' ELECTRIC EASEMENT.
2. IF DRAINAGE OR OTHER EASEMENT LOCATED BETWEEN LOTS, METER BOXES SHALL BE LOCATED AT THE EASEMENT LINE BUT OUTSIDE THE EASEMENT AREA.
3. FOR SINGLE SERVICES, THE HORIZONTAL DISTANCE (PERPENDICULAR TO THE MAIN)BETWEEN THE SERVICES SADDLE AND THE METER BOX SHALL BE 2 FEET MAXIMUM. FOR DOUBLE 1" SERVICES, THE 2" POLY MAIN SHALL BE LOCATED CENTERED BETWEEN THE TWO METER BOXES. LOCATE WIRE IS REQUIRED ON ALL SERVICES 10' OR GREATER IN LENGTH. IF LOCATE WIRE IS REQUIRED, THE WIRE SHALL RUN FROM THE METER BOX (W/ P/G TAIL) TO THE MAIN (DEAD END SHALL BE TAPED WITH NO CONNECTION TO MAIN WIRE WITH THE LAST 24 INCHES STRIPED OF INSULATION/BARE WIRE AS GROUND). ALL EXCEPTIONS TO THIS REQUIREMENT MUST BE APPROVED BY JEA. THIS WILL ASSIST IN LOCATING EXISTING SERVICE LINES IN THE FUTURE.
4. GANG WATER SERVICES: FOR 3 OR 4 SERVICES IN ONE AREA, A DUCTICLE IRON PIPE (D.I.P.) WATER MAIN EXTENSION W/LOCATE WIRE MAY BE UTILIZED ON EITHER SHORT-SIDE OR LONG SIDE SERVICES WHERE SHOWN ON THE DRAWINGS. LOCATE WIRE SHALL EXTEND FROM ONE METER BOX TO CORP STOP AT WATER MAIN. FOR 5 OR MORE SERVICES IN ONE AREA, A WATER MAIN EXTENSION W/LOCATE WIRE MAY BE UTILIZED ON EITHER SHORT-SIDE OR LONG SIDE SERVICES WHERE SHOWN ON THE DRAWINGS (TAPS STAGGERED AND AT 2 FEET ON CENTER-MIN). FOR WATER SUPPLY HEADERS WHERE 5 OR MORE TAPS ARE CONSTRUCTED, THE HEADER PIPE SHALL BE 4" AT A MINIMUM. EXAMPLE: CONSTRUCT A 4" MAIN PVC CROSSING THE STREET FOR 5 RESIDENTIAL CUSTOMERS, UTILIZING 4" DIP, 4" PIPE, 4"X1" SADDLES AND 1" CORP STOPS (NO GLUED TEE FITTINGS). THE 4" OR LARGER D.I.P. WATER MAIN MUST BE SIZED AND DESIGNED BY THE P.E. ENGINEER.
5. DOUBLE 1" WATER SERVICES IS ALLOWED FOR SHORT SIDE OR LONG SIDE SERVICES AND WHERE SHOWN ON THE DRAWINGS.
6. A 1" IRRIGATION SERVICE MAYBE TAPPED INTO THE (1" MIN) DOMESTIC WATER SERVICE LINE (WHICH SERVES THE SAME CUSTOMER) UTILIZING A 1" BRONZE "Y" FITTING. (IN AREAS WHERE NO RECLAIMED WATER IS AVAILABLE).
7. No 2" AND SMALLER WATER SERVICE TAPS PERMITTED ON WATER MAINS WHICH ARE 20" AND LARGER SIZE.
8. RECLAIMED WATER METER BOXES OR SERVICES SHALL BE CONSTRUCTED SIMILAR TO THE ABOVE AND SHALL BE LOCATED, AT A MIN. OF 10' FROM THE POTABLE WATER SERVICE, AND/OR BOX AND NOT ALLOWED IN CONCRETE OR ASPHALT UNLESS APPROVED OTHERWISE BY JEA.
9. SERVICE SIZE SHALL BE SAME AS THE METER SIZE.

WATER OR RECLAIM SERVICE INSTALLATIONS 2" AND SMALLER METER

JANUARY 2019 PLATE W-2

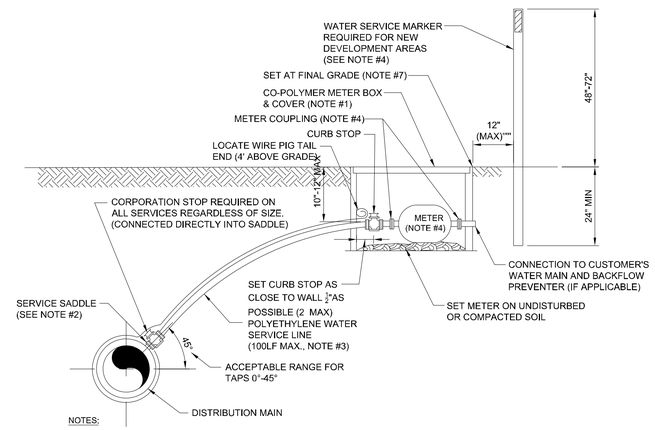

NOTES:

1. SEE PLATE W-1 FOR METER LOCATION REQUIREMENTS.
2. SINGLE BAND SADDLES SHALL BE UTILIZED ON NEW 1" WATER SERVICES WHICH ARE INSTALLED ON A DRY 10" SIZE OR SMALLER WATER MAIN (NEW WATER MAIN CONSTRUCTION). FOR WET TAPS OR WATER MAINS 12" SIZE AND LARGER, A DOUBLE BAND SADDLE IS REQUIRED. BRASS SADDLES MAY BE UTILIZED ON NEW 1 INCH AND SMALLER WATER SERVICES WHICH ARE INSTALLED ON A DRY 10 INCH OR SMALLER PVC WATER MAIN.
3. NO OPEN CUT UNDER ROADWAY PAVING ALLOWED UNLESS THE ROADWAY IS BEING RECONSTRUCTED OR IF DIRECTED OTHERWISE BY C.O.F.B. CONSTRUCT POLY LINE WITH 24" (MIN.) COVER UNDER ROADWAYS. THE POLY WATER SERVICE LINE SHALL BE SAME SIZE AS THE METER (1" MINIMUM) AND BE INSTALLED PERPENDICULAR TO THE MAIN AND NOT EXCEED 100LF UNLESS APPROVED OTHERWISE BY C.O.F.B.
4. INSTALL PVC PLUG IN ALL CURB STOPS IF WATER SERVICE IS "NOT IN USE" (I.E.: IF NO METER IS INSTALLED). WATER SERVICES SERVING VACANT LOTS (SERVICE NOT IN USE), SHALL INCLUDE A "W" CUT INTO THE CURB (CLOSEST TO THE METER BOX), AND PAINTED BLUE (PAINTED PURPLE FOR RECLAIMED WATER). IN ADDITION, FOR NEW DEVELOPMENT AREAS WHERE THE WATER SERVICE IS "NOT IN USE", A LANDSCAPE TIMBER OR 3x3 MIN. P.T. POST (TOP PAINTED BLUE OR PURPLE FOR RECLAIMED WATER). THE REMOVAL OR TRANSFER OF A WATER SERVICE SHALL INCLUDE BRASS METER COUPLINGS (HEX ON BARREL TYPE).
5. NO 2" AND SMALLER WATER SERVICE TAPS PERMITTED ON WATER MAINS WHICH ARE 20" AND LARGER SIZE.
6. THE CONTRACTOR SHALL BE RESPONSIBLE FOR THE REPAIR OR REPLACEMENT OF THE METER OR ELECTRONIC DEVICES IF DAMAGED BY THE CONTRACTOR DURING THE CONSTRUCTION PERIOD.
7. METER BOX AND TOP SHALL BE CLEAR OF ALL DEBRIS TO ALLOW FULL ACCESS TO BOX (i.e. NO DIRT, TRASH OR OTHER DEBRIS PLACED ON TOP OF BOX).
8. LOCATE WIRING REQUIRED ON ALL SERVICES 10' OR GREATER IN LENGTH. SEE PLATE W-44.

WATER SERVICE DETAIL- 2" AND SMALLER METER

JANUARY 2019 PLATE W-2

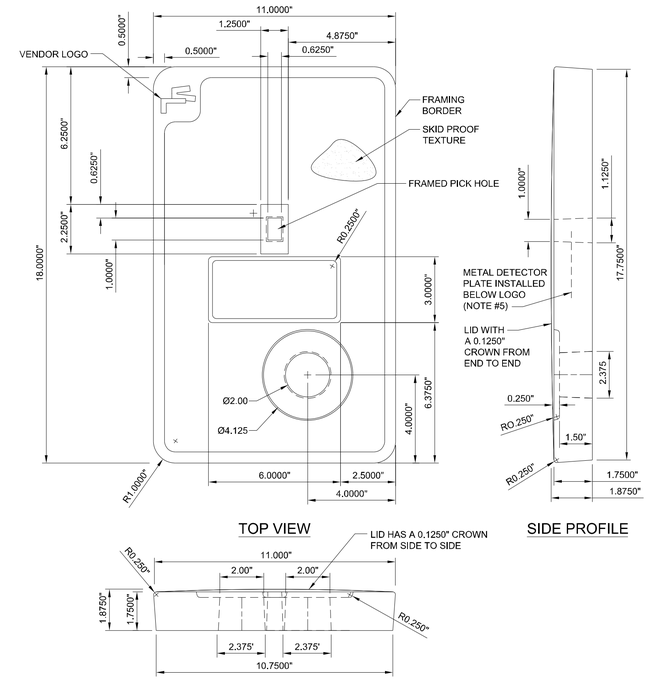

NOTES:

1. ALL DIMENSIONS ARE IN INCHES.
2. COLOR SHALL BE OFF-WHITE, NON-POROUS, SAND TEXTURED SATIN FINISH.
3. ALL TOPS SHALL MEET A-8 (ASTM C857) LOAD RATING.
4. THE LID SHALL BE CERTIFIED BY CELLNET TECHNOLOGY INC AND SENSUS METERING SYSTEMS TO BE RF COMPATIBLE WITH THE SENSUS MTU.
5. METAL DETECTOR PLATE SHALL BE DETECTABLE BY JEA MAGNETIC LOCATE EQUIPMENT.
6. THE ONE HOLE LIDS ARE FOR SPECIAL ORDERS ONLY AND REQUIRE JEA'S APPROVAL PRIOR TO USE.

WATER METER BOX POLYMER COVER MODEL No. 37 - ONE HOLE

JANUARY 2019 PLATE W-3B

$$FileName$$
$$time$$
$$date$$

No.	By	Date	Revision
J			
I			
H			
G			
F			
E			
D			
C	MP	1–6–20	Revised Phase Lines
B	MP	10–30–19	Revised Per C.O.F.B. Comments
A	MP	9–12–19	TRC Submittal

Scale:
Project Mgr: AG
Designed by: AG
Drawn by: MP
QA/QC: NG

Gillette & Associates, Inc.
20 South 4th Street
Fernandina Beach, FL 32034

Certificate of Authorization No. 9332

DO NOT SCALE THIS DRAWING – DIMENSIONS AND NOTES TAKE PREFERENCE. DRAWING IS REDUCED IF LESS THAN 22" x 34"

G & A
GILLETTE & ASSOCIATES, INC
20 SOUTH 4TH STREET
FERNANDINA BEACH, FL 32034
PHONE: (904) 261-8819
FAX: (904) 261-9905

PRIVATE COMMERCIAL HANGAR

CLAY LEE

WATER DETAILS

Registered Professional

SHEET NO.
DET-2
10 of 12
Issue Date
September 12, 2019
Project No.
19–10.31

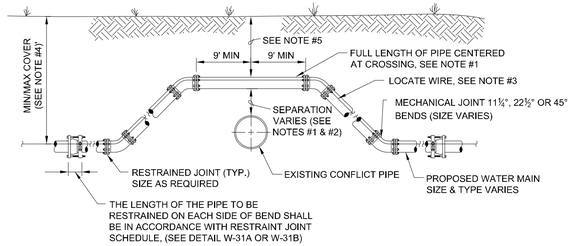

CASE "A" CROSSING

NOTES:

1. THE SOILS BETWEEN THE NEW MAIN AND THE CONFLICT PIPE SHALL BE COMPACTED TO 98% OF THE MAXIMUM DENSITY AS DETERMINED BY THE LABORATORY MODIFIED PROCTOR TEST, ASTM D 1557.
2. FOR MINIMUM VERTICAL SEPARATION REQUIREMENTS SEE DETAIL (W-10 AND W-11).
3. LOCATING WIRE REQUIRED: SEE DETAIL W-44.
4. THE COVER FOR PIPING LESS THAN 24" SIZE SHALL BE 30" (MIN) IN UNPAVED AREAS, 36" (MIN) IN PAVED AREAS AND A MAXIMUM COVER OF 60", UNLESS APPROVED BY JEA. THE COVER FOR PIPING 24" SIZE AND LARGER SHALL BE 36" (MIN) IN PAVED AND UNPAVED AREAS AND A MAXIMUM COVER OF 84", UNLESS APPROVED BY JEA.
5. IF UTILITY CONFLICT IS LOCATED IN A NON-TRAFFIC AREA (NO TRAFFIC LOADS) AND THE NEW PIPE IS D.I.P., THEN THE MINIMUM COVER MAY BE REDUCED TO 24 INCHES (ONLY IN THE AREA OF THE CONFLICT).

ADJUSTMENT OVER EXISTING UTILITIES MECHANICAL RESTRAINTS

JANUARY 2019 PLATE W-32

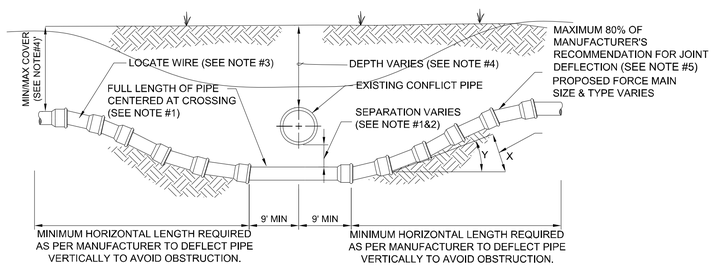

CASE "B" CROSSING

NOTES:

1. IF EXISTING CONFLICT PIPE IS A WATER MAIN, 12-INCHES OF SEPARATION IS REQUIRED. A FULL LENGTH OF PIPE SHALL BE CENTERED OVER EXISTING UTILITY MAIN TO PROVIDE MAXIMUM JOINT SPACING FOR ALL CROSSING.
2. FOR OTHER LOCATION LIMITATIONS SEE DETAIL (W-10 & W-11).
3. LOCATING WIRE REQUIRED: SEE DETAIL W-44.
4. THE COVER OVER ALL PIPING LESS THAN 24" SIZE SHALL BE A MINIMUM OF 30" IN UNPAVED AREAS AND 36" IN PAVED AREAS WITH A MAXIMUM COVER OF 60" UNLESS APPROVED OTHERWISE BY JEA. COVER FOR PIPING 24" SIZE AND LARGER SHALL BE MINIMUM OF 36" (PAVED AND UNPAVED) AND MAXIMUM OF 84" UNLESS APPROVED OTHERWISE BY JEA. THE SOILS BETWEEN THE NEW MAIN AND THE CONFLICT PIPE SHALL BE COMPACTED TO 98% OF THE MAXIMUM DENSITY AS DETERMINED BY THE LABORATORY MODIFIED PROCTOR TEST ASTM D 1557.
5. JEA ONLY ALLOWS 80% OF THE PIPE MANUFACTURER'S RECOMMENDATION FOR JOINT DEFLECTION. BENDING THE PIPE BARREL IS NOT ALLOWED. UNLESS OTHERWISE APPROVED BY JEA, THE MAXIMUM ARE LISTED IN TABLE BELOW. ONLY MANUAL FORCE CAN BE UTILIZED TO OBTAIN THESE JOINT DEFLECTION. ALL OFFSETS ARE BASED ON MINIMUM 20LF PIPE LENGTH.

MAXIMUM ALLOWED OFFSET FOR PIPE BY JOINT DEFLECTION

PVC PIPE

PIPE SIZE (IN.)	(X) MAX. OFFSET (IN.)	(Y) ANGLE AT ONE BELL	RESULTING RADIUS OF CURVE WITH 20FT. LENGTHS
2	30	7°	158 FT
4	10	2.4°	480 FT
6	10	2.4°	480 FT
8	10	2.4°	480 FT
10	10	2.4°	480 FT
12	8.5	2°	564 FT
14 - 24	5	1.2°	960 FT
30 - 48	3.25	0.8°	1477 FT

DUCTILE IRON PIPE (Mechanical Joint)

PIPE SIZE (IN.)	(X) MAX. OFFSET (IN.)	(Y) ANGLE AT ONE BELL	RESULTING RADIUS OF CURVE WITH 20FT. LENGTHS
-	-	-	-
4	27	6.5°	177 FT
6	24	5.7°	200 FT
8 - 12	17.5	4.2°	273 FT
14 - 16	12	2.9°	400 FT
18 - 20	10	2.4°	477 FT
24 - 30	8	1.9°	600 FT
36	7	1.7°	687 FT
42 - 48	6.7	1.6°	716 FT

ADJUSTMENT UNDER EXISTING UTILITIES PIPE JOINT DEFLECTION

JANUARY 2019 PLATE W-40

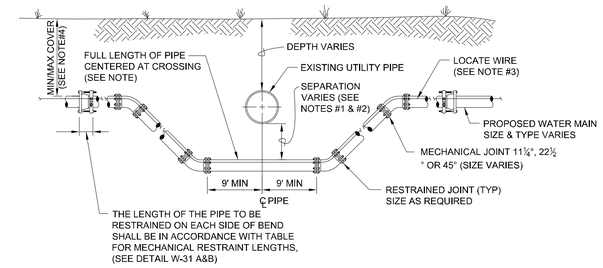

CASE "B" CROSSING

NOTES:

1. THE SOILS BETWEEN THE NEW MAIN AND THE CONFLICT PIPE SHALL BE COMPACTED TO 98% OF THE MAXIMUM DENSITY AS DETERMINED BY THE LABORATORY MODIFIED PROCTOR TEST, ASTM D 1557
2. FOR MINIMUM VERTICAL SEPARATION REQUIREMENTS SEE DETAILS (W-10 AND W-11)
3. LOCATING WIRE REQUIRED: SEE DETAIL W-44.
4. THE COVER FOR PIPING LESS THAN 24" SIZE SHALL BE 30" (MIN) IN UNPAVED AREA, 36" (MIN) IN PAVED AREAS AND A MAXIMUM COVER OF 60", UNLESS APPROVED BY JEA. THE COVER FOR PIPING 24" SIZE AND LARGER SHALL BE 36" (MIN) IN PAVED AND UNPAVED AREAS AND A MAXIMUM COVER OF 84", UNLESS APPROVED BY JEA.

ADJUSTMENT UNDER EXISTING UTILITIES MECHANICAL RESTRAINTS

JANUARY 2019 PLATE W-34

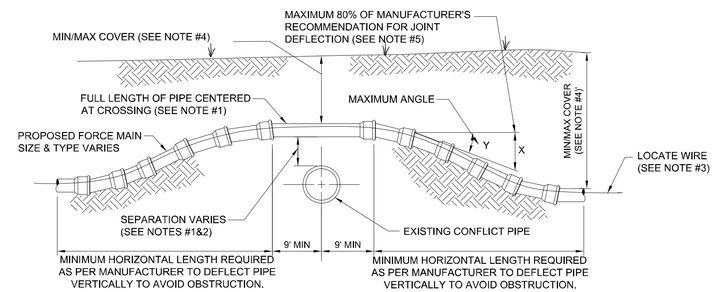

CASE "A" CROSSING

NOTES:

1. IF EXISTING CONFLICT PIPE IS A WATER MAIN, 12-INCHES OF SEPARATION IS REQUIRED. A FULL LENGTH OF PIPE SHALL BE CENTERED OVER EXISTING UTILITY MAIN TO PROVIDE MAXIMUM JOINT SPACING FOR ALL CROSSING.
2. FOR OTHER LOCATION LIMITATIONS SEE DETAIL (S-10 & W-11).
3. LOCATING WIRE REQUIRED: SEE DETAIL W-44.
4. THE COVER OVER ALL PIPING LESS THAN 24" SIZE SHALL BE A MINIMUM OF 30" IN UNPAVED AREAS AND 36" IN PAVED AREAS WITH A MAXIMUM COVER OF 60" UNLESS APPROVED OTHERWISE BY JEA. COVER FOR PIPING 24" SIZE AND LARGER SHALL BE MINIMUM OF 36" (PAVED AND UNPAVED) AND MAXIMUM OF 84" UNLESS APPROVED OTHERWISE BY JEA. THE SOILS BETWEEN THE NEW MAIN AND THE CONFLICT PIPE SHALL BE COMPACTED TO 98% OF THE MAXIMUM DENSITY AS DETERMINED BY THE LABORATORY MODIFIED PROCTOR TEST ASTM D 1557.
5. JEA ONLY ALLOWS 80% OF THE PIPE MANUFACTURER'S RECOMMENDATION FOR JOINT DEFLECTION. BENDING THE PIPE BARREL IS NOT ALLOWED. UNLESS OTHERWISE APPROVED BY JEA, THE MAXIMUM ARE LISTED IN TABLE BELOW. ONLY MANUAL FORCE CAN BE UTILIZED TO OBTAIN THESE JOINT DEFLECTION. ALL OFFSETS ARE BASED ON MINIMUM 20LF PIPE LENGTH.

MAXIMUM ALLOWED OFFSET FOR PIPE BY JOINT DEFLECTION

PVC PIPE

PIPE SIZE (IN.)	(X) MAX. OFFSET (IN.)	(Y) ANGLE AT ONE BELL	RESULTING RADIUS OF CURVE WITH 20FT. LENGTHS
2	30	7°	158 FT
4	10	2.4°	480 FT
6	10	2.4°	480 FT
8	10	2.4°	480 FT
10	10	2.4°	480 FT
12	8.5	2°	564 FT
14 - 24	5	1.2°	960 FT
30 - 48	3.25	0.8°	1477 FT

DUCTILE IRON PIPE (Mechanical Joint)

PIPE SIZE (IN.)	(X) MAX. OFFSET (IN.)	(Y) ANGLE AT ONE BELL	RESULTING RADIUS OF CURVE WITH 20FT. LENGTHS
-	-	-	-
4	27	6.5°	177 FT
6	24	5.7°	200 FT
8 - 12	17.5	4.2°	273 FT
14 - 16	12	2.9°	400 FT
18 - 20	10	2.4°	477 FT
24 - 30	8	1.9°	600 FT
36	7	1.7°	687 FT
42 - 48	6.7	1.6°	716 FT

ADJUSTMENT OVER EXISTING UTILITIES PIPE JOINT DEFLECTION

JANUARY 2019 PLATE W-41

$$time$$ $$FileName$$

No.	By	Date	Revision
J			
I			
H			
G			
F			
E			
D			
C	MP	1–6–20	Revised Phase Lines
B	MP	10–30–19	Revised Per C.O.F.B. Comments
A	MP	9–12–19	TRC Submittal

Scale:
Project Mgr: AG
Designed by: AG
Drawn by: MP
QA/QC: NG

Gillette & Associates, Inc.
20 South 4th Street
Fernandina Beach, FL 32034

Certificate of Authorization No. 9332

DO NOT SCALE THIS DRAWING – DIMENSIONS AND NOTES TAKE PREFERENCE. DRAWING IS REDUCED IF LESS THAN 22" x 34"

G & A‡
GILLETTE & ASSOCIATES, INC
20 SOUTH 4TH STREET
FERNANDINA BEACH, FL 32034
PHONE: (904) 261-8819
FAX: (904) 261-9905

PRIVATE COMMERCIAL HANGAR

CLAY LEE

WATER DETAILS

Registered Professional

SHEET NO.
DET-3
11 of 12

Issue Date
September 12, 2019

Project No.
19–10.31

PVC PIPE RESTRAINT NOTES:

1. THIS SCHEDULE SHALL BE UTILIZED ON ALL WATER, SEWER FORCE MAIN OR RECLAIMED WATER SYSTEMS. ALL FITTINGS SHALL BE RESTRAINED TO LENGTHS INDICATED ON THE ABOVE SCHEDULE, AT A MINIMUM.
2. ASSUMPTIONS: PVC PIPE, SAFETY FACTOR=1.5, TEST PRESSURE=150PSI, SOIL=GM OR SM, TRENCH TYPE 3, DEPTH OF COVER=30 INCHES FOR 20" AND SMALLER PIPE SIZE OR 36 INCHES FOR 24" AND LARGER PIPE SIZE.
3. BENDS AND VALVES: SHALL BE RESTRAINED ON EACH SIDE OF FITTING.
4. VERTICAL OFFSETS: ARE APPROX. 3 FEET COVER ON TOP AND APPROX. 8 FEET COVER ON BOTTOM. PER THE DETAILS, L_U IS THE RESTRAINED LENGTH FOR THE UPPER (TOP) LEVEL. L_l IS THE RESTRAINED LENGTH FOR THE LOWER (DEEPER) LEVEL. ASSUME 45 DEGREE BENDS.
5. TEES: TOTAL LENGTH BETWEEN FIRST JOINTS OR RESTRAINED LENGTH ON EITHER SIDE OF TEE (RUN) SHALL BE A TOTAL DISTANCE OF 30 FEET (MIN). SEE SCHEDULE ABOVE FOR RESTRAINT LENGTH ON TEE "BRANCH" LINE.
6. HDPE TO PVC TRANSITIONS: THE PVC PIPE SIDE SHALL BE RESTRAINED 35 FT (MIN).
7. THE INSTALLATION OF BELL HARNESS RESTRAINTS AT PVC JOINTS (DR-18 & 25 PIPE) SHALL BE COMPLETED PER THE MANUFACTURERS RECOMMENDATION, WHICH INCLUDES NOT OVER TIGHTENING THE PARALLEL RODS/NUTS. THESE NUTS SHOULD ONLY BE SNUG TIGHT. THE HOME MARKS ON THE PIPE SHOULD ALWAYS BE VISIBLE AFTER THE RESTRAINT IS INSTALLED. OVERHOMING THE JOINT MAY CAUSE A FAILURE AT THE BELL RESULTING IN A SERVICE OUTAGE.

LENGTH (L) TO BE RESTRAINED (SEE PLATE Nos. 38C & 38D FOR ADDITIONAL DETAILS)

NOMINAL PIPE SIZE (IN.)	HORIZONTAL BENDS 90° BENDS L (FT.)	45° BENDS L (FT.)	22.5° BENDS L (FT.)	11.25° BENDS L (FT.)	VERTICAL OFFSETS 45° BENDS (SEE NOTE 4) UPPER L (FT.)	LOWER L (FT.)	VALVES OR DEAD ENDS L (FT.)
4	21	9	5	3	17	3	47
6	30	13	6	3	23	4	66
8	38	16	8	4	30	6	86
10	45	19	9	5	36	7	103
12	53	22	11	6	43	8	121
14	61	26	13	6	50	9	140
16	66	28	14	7	55	10	154
18	73	30	15	8	60	11	170
20	79	33	16	8	66	12	186
24	79	33	16	8	77	15	185
30	93	39	19	10	97	17	222
36	106	39	21	11	107	20	257
42	117	49	24	12	120	24	289
48	144	53	26	13	133	26	321

REDUCERS SIZE (IN.)	L (FT.)
6x4	34
8x6	36
8x4	62
10x8	35
10x6	63
12x10	36
12x8	64
16x12	66
16x10	92
20x18	35
20x16	66
20x12	117
24x20	56
24x18	80
24x16	101
30x24	78
30x20	121
36x30	78
36x24	141
42x36	75
42x30	140
48x42	75
48x36	139

TEES SEE NOTE 5 RUN SIZE (IN.)	BRANCH SIZE (IN.)	L (FT.)
4	4	F.O.
4	6 4 < LESS	10 F.O.
8	8 6 < LESS	29 F.O.
10	10 8 6 < LESS	45 13 F.O.
12	12 10 8 < LESS	62 32 F.O.
16	16 12 10 10 < LESS	94 39 5 F.O.
20	20 16 12 10 < LESS	125 76 14 F.O.
24	24 20 16 12 < LESS	124 84 36 F.O.
30	30 24 20 16 16 < LESS	159 104 60 5 F.O.
36	36 30 24 20 16 < LESS	192 142 83 33 F.O.
42	42 36 30 24 20 16 < LESS	223 178 124 59 5 F.O.
48	48 42 36 30 24 20 < LESS	253 209 162 104 34 F.O.

F.O. = FITTING ONLY

PVC PIPE RESTRAINT JOINT SCHEDULE

JANUARY 2019 PLATE W-31A

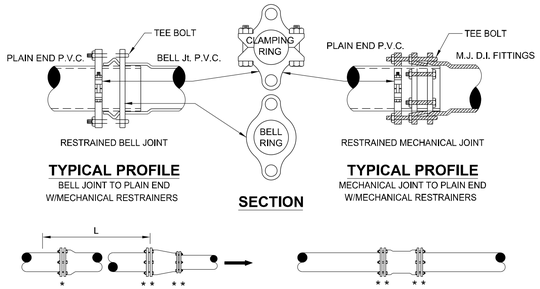

TYPICAL PROFILE
BELL JOINT TO PLAIN END W/MECHANICAL RESTRAINERS

SECTION

TYPICAL PROFILE
MECHANICAL JOINT TO PLAIN END W/MECHANICAL RESTRAINERS

REDUCER

MECHANICAL JOINT SLEEVES

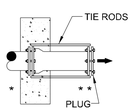

NO. OF TIE RODS REQUIRED

3" - 8"	DIAMETER MAIN - 2 TIE RODS REQUIRED PER JOINT (3/4" ROD)
10" - 12"	DIAMETER MAIN - 4 TIE RODS REQUIRED PER JOINT (3/4" ROD)
14" - 16"	DIAMETER MAIN - 6 TIE RODS REQUIRED PER JOINT (3/4" ROD)
18" - 20"	DIAMETER MAIN - 8 TIE RODS REQUIRED PER JOINT (3/4" ROD)
24"	DIAMETER MAIN - 12 TIE RODS REQUIRED PER JOINT (3/4" ROD)
30" - 36"	DIAMETER MAIN - 14 TIE RODS REQUIRED PER JOINT (1" ROD)
42" - 48"	DIAMETER MAIN - 16 TIE RODS REQUIRED PER JOINT (1 1/4" ROD)
54"	DIAMETER MAIN - 18 TIE RODS REQUIRED PER JOINT (1 1/4" ROD)

DEAD - END THRUST COLLAR ANCHOR

TO BE USED INSTEAD OF TOTAL RESTRAINED LENGTH (OPTIONAL) SIZE AS PER THRUST BLOCK DETAIL (W-38). SEE DETAILS W-36 & W-37.

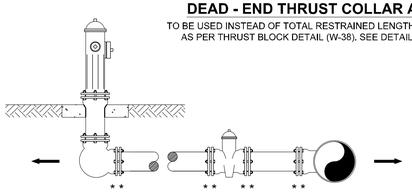

FIRE HYDRANT LATERAL

GENERAL NOTE:

1. PAY ITEM " * " DENOTES A RESTRAINT WHICH IS PAID FOR ON A PER EACH BASIS.
2. PAY ITEM " ** " DENOTES A RESTRAINT WHICH IS INCLUDED IN THE UNIT PRICE BID FOR FITTING OR VALVE.
3. ➡ INDICATES DIRECTION OF THRUST FORCE.

MECHANICAL RESTRAINT DETAILS - I

JANUARY 2019 PLATE W-31C

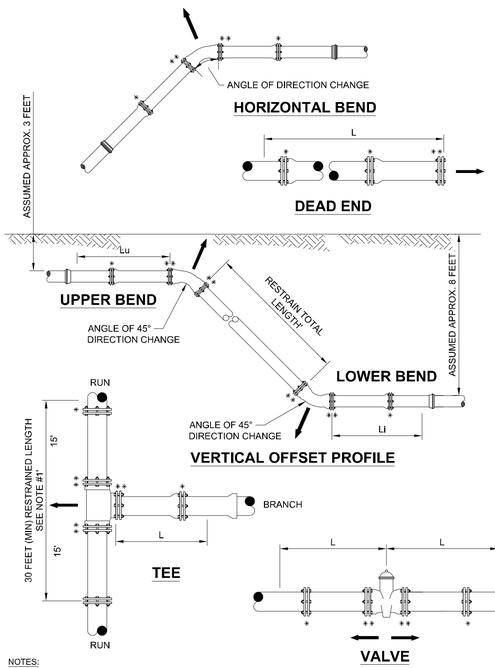

NOTES:

1. TOTAL LENGTH BETWEEN FIRST JOINTS OR RESTRAINED LENGTH ON EITHER SIDE OF TEE (RUN) SHALL BE A TOTAL DISTANCE OF 30 FEET (MIN.).
2. PAY ITEM *** DENOTES A RESTRAINT WHICH IS PAID FOR ON A PER EACH BASIC.
3. PAY ITEM **** DENOTES A RESTRAINT WHICH IS INCLUDED IN THE UNIT PRICE BID FOR FITTING OR VALVE.

MECHANICAL RESTRAINT DETAILS - II

JANUARY 2019 PLATE W-31D

A LOCATE WIRE SHALL BE PLACED ON SERVICES 10FT OR GREATER.

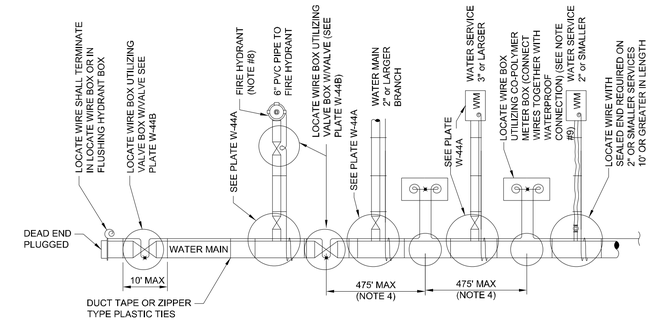

LOCATE WIRE SYSTEM

NOTES:

1. LOCATING WIRE TO BE INSTALLED IN EITHER THE ONE OR ELEVEN O'CLOCK POSITION ON ALL DUCTILE IRON 0R PVC (PRESSURE MAINS). LOCATE WIRE SHALL ALSO BE INSTALLED ON ALL (HDPE) POLY MAIN PIPING (1:00 OR 11:00 POSITION, IF POSSIBLE).
2. SECURE LOCATING WIRE TO PVC & D.I.P. WATER MAIN BY USE OF DUCT TAPE OR ZIPPER TYPE PLASTIC TIE STRAPS SPACED AT A MAXIMUM DISTANCE OF TEN (10') AND AT EACH SIDE OF BELL JOINT OR FITTING.
3. THE ENTIRE LOCATING SYSTEM SHALL BE SUBJECTED TO TESTING TO DETERMINE ITS RELIABILITY. WHERE INSTALLED UNDER PAVEMENT AREAS, TESTING SHALL BE DONE PRIOR TO THE PLACEMENT OF PAVEMENT, UNLESS APPROVED OTHERWISE BY JEA.
4. LOCATING WIRE SHALL TERMINATE WITHIN AN ACTIVE VALVE BOX (WITH A VALVE) OR A METER BOX (IF NO VALVE) AT 475' INTERVALS. SEE DETAIL PLATE W-44B. WIRE CONNECTIONS BELOW GROUND (OUTSIDE OF A BOX) SHALL BE AVOIDED.
5. REFER TO SECTION 350 FOR LOCATE WIRE SPECIFICATIONS.
6. " ■ " INDICATES THAT THE WIRES ARE CONNECTED TOGETHER WITH A WATERPROOF CONNECTION. (SEE DETAIL W-44B)
7. " ◎ " INDICATES A WIRE PIG-TAIL (4" LONG)
8. FOR FIRE HYDRANT LOCATE WIRE REQUIREMENTS AND EXCLUSIONS, SEE PLATES W-12,13 AND 14.
9. AN "LW" CUT SHALL BE CARVED IN THE CONCRETE CURB AND PAINTED AT ALL LOCATE WIRE BOXES.
10. FOUR LANES OF TRAFFIC (HAVING TWO LANES OF TRAFFIC IN EACH DIRECTION) OR GREATER THE LOCATE WIRE AND VALVE BOX SHALL BE OFF-SET TO THE RIGHT-OF-WAY.

LOCATE WIRE CONSTRUCTION FOR WATER MAINS

JANUARY 2019 PLATE W-44

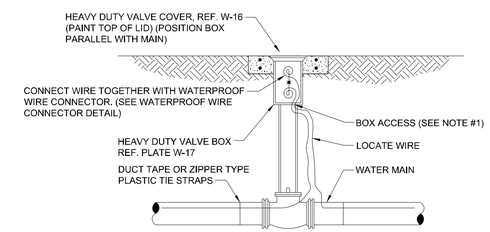

LOCATE WIRE BOX UTILIZING VALVE BOX

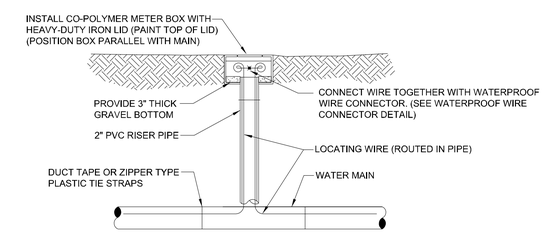

LOCATE WIRE BOX UTILIZING METER BOX

LOCATE WIRE BOX

JANUARY 2019 PLATE W-44B

$$FileName$$ $$time$$ $$date$$

No.	By	Date	Revision
J			
I			
H			
G			
F			
E			
D			
C	MP	1–6–20	Revised Phase Lines
B	MP	10–30–19	Revised Per C.O.F.B. Comments
A	MP	9–12–19	TRC Submittal

Scale:
Project Mgr: AG
Designed by: AG
Drawn by: MP
QA/QC: NG

Gillette & Associates, Inc.
20 South 4th Street
Fernandina Beach, FL 32034

Certificate of Authorization No. 9332

DO NOT SCALE THIS DRAWING – DIMENSIONS AND NOTES TAKE PREFERENCE. DRAWING IS REDUCED IF LESS THAN 22" x 34"

G & A‡
GILLETTE & ASSOCIATES, INC
20 SOUTH 4TH STREET
FERNANDINA BEACH, FL 32034
PHONE: (904) 261-8819
FAX: (904) 261-9905

PRIVATE COMMERCIAL HANGAR

CLAY LEE

WATER DETAILS

Registered Professional

SHEET NO.
DET-4
12 of 12

Issue Date
September 12, 2019
Project No.
19–10.31